MICRO SPARE PARTS CATALOGUE

29.01.2025

CONTENTS

ADULTS

Micro Classic White 7
Micro Classic Black | Neochrome 9
Micro Classic Black | White Deluxe 11
Micro Classic Black | White Interlock
Micro Suspension 13
Micro Flex 15
Micro Lady Flex 17
Micro Flex Air 19
Micro Speed 21
Micro Speed Deluxe 23
Micro Bullet 25
Micro Monster Bullet 27
Micro Rocket 29
Micro Rocket Deluxe 31
Micro Sprite 33
Micro Sprite Deluxe 37
Micro Sprite Suspension 39
Micro Light 41
Micro Eazy 43
Micro Metropolitan / Deluxe 45
Micro Downtown 47
Micro Pedalflow 49
Micro Navigator 51
Micro Suburb 53
Micro Kickboard Original 57
Micro Kickboard Compact 59
Micro Kickboard Monster 63
Micro Kickboard Reloaded 65

KIDS

Micro G-Bike 69
Micro G-Bike Chopper | Deluxe 71
Mini Balance Bike 73
Micro Balance Bike Deluxe 75
Micro Balance Bike Deluxe Pro 77
Micro Balance Bike Lite 79
Micro Balance Bike Dino 81
Micro Mini Classic 83
Micro Mini Deluxe | Foldable | ECO 87
Magic | 3in1 Deluxe | Flux | Glow
Micro Mini2Go 93
Micro Mini2Grow 97
Mini Micro Sporty 101
Micro Piccolino 103
Micro Maxi Classic | Foldable 105
Micro Maxi Deluxe | Foldable | LED 109
Micro Maxi Deluxe Pro 113
Micro Cruiser 115
Air Hopper 117
Air Hopper II 119
Mini Microlino 121

TRAVEL

Micro Luggage 2 125
Micro Kickpack | Lite | 3.0 127
Micro Lazy Luggage 129
Micro Luggage Eazy Business 131
Micro Ride On Luggage Eazy 133
Micro Luggage 3.0 135
Micro Luggage 4.0 137
Micro Maxi 4in1 139
Micro Luggage Junior 141
Micro Trike | Deluxe 143
Micro Trike XL 145
Micro Tricycle 147
Micro Baby Cruiser 360° 149

FREESTYLE

Micro Trixx | 2.0 153
Micro Ramp 157
Micro Freeride Street 159
Micro Crossneck | XL 161
Micro Crossneck 2.0 163
Micro Micro Core | XL 165
Micro Benj Pro Model 167
Micro Stunt Scooter Genesis 169
Micro Stunt Scooter Maverick 171
Micro Stunt Scooter Supreme 173
Micro Trooper 175
Micro Black Ice 177

ADULTS

Scooter

MICRO CLASSIC WHITE

PARTS

Article No.	Article
1004	Axle Bolt Internal Thread, 44 mm
1006	Locking Complete
1009	Push Button, Blue
1017	Plugs, Handle Bolt, Rubber Strip
1021	Plastic Linkage Tube
1022	T-Tube
1024	Multimountclip
1025	Quick-Acting Clamp, Silver
1031	Axle Bolt internal Thread,19 mm
1161	Axle Bolt external Thread, 10.5 mm
1179	Axle Bolt internal Thread, 43 mm
1180	Axle Bolt internal Thread, 62 mm
1181	Axle Bolt internal Thread, 47.5 mm
1182	Spacer External Bearings 9.4 mm
1183	Folding Block
1184	Holder Plates Left And Right
1185	Brake Plate
1186	Brake Spring
1187	Brake Bolt
1189	Fastening Elements Wheel Back
1190	Lower T-Tube
1191	Lower Clamp
1192	Steering Fork
1193	Front Holder
1194	Deck And Griptape
1195	Griptape
1196	Kick Stand With Screws
1198	Push Button, Silver
1282	Spacer Between Bearings 24.3 mm

ACCESSORIES

Article No.	Article
1553	Axle Bolt External Thread, 21.5 mm
1578	Lower Clamp, 200 mm
1586/1023	Bolt And Spring T-Bar
1652	Width Nut, 200 mm
4604	Inveter Logic Complete Set (CH)
4661	Fender

Article No.	Article
AC6001B	Foam Handles Blister
AC6002B	Handles With Plugs Blister
AC5009B	Wheel Complete Blister 200 mm
AC7007B	Brake Complete Blister
AC1007	Bearing 1 piece ABEC 9

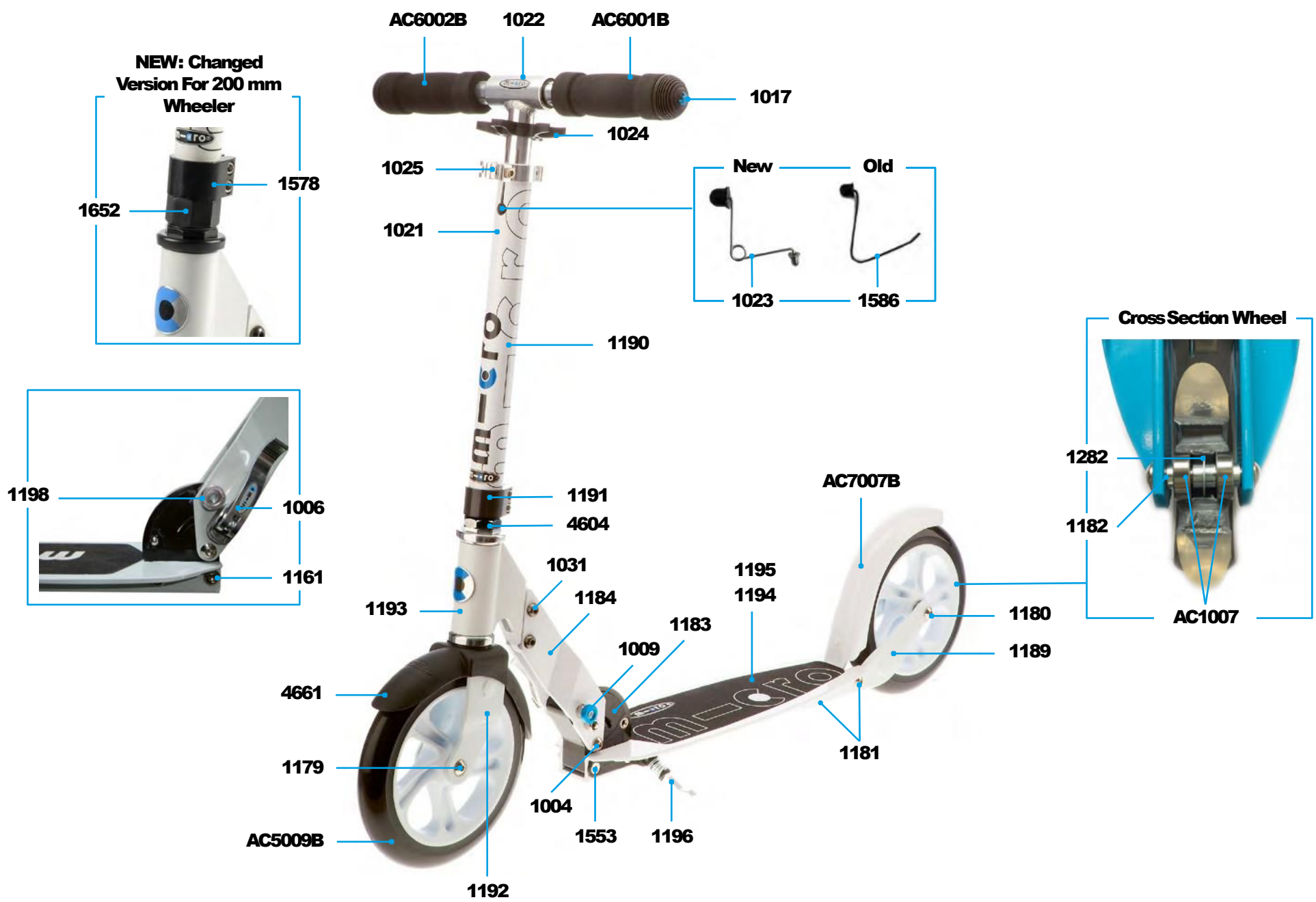

MICRO CLASSIC BLACK

PARTS

Article No.	Article
1004	Axle Bolt Internal Thread, 44 mm
1006	Locking Complete Silver
4744	Locking Complete Black
1009	Push Button, Blue
1017	Plugs, Handle Bolt, Rubber Strip
1021	Plastic Linkage Tube
1022	T-Tube
4103	Chopper T-Bar Complete Black
1024	Multimountclip
1025	Quick-Acting Clamp, Silver
4709	Quick-Acting Clamp, Black
1031	Axle Bolt Internal Thread,19 mm
1161	Axle Bolt External Thread, 10.5 mm
1179	Axle Bolt Internal Thread, 43 mm
1180	Axle Bolt Internal Thread, 62 mm
1181	Axle Bolt Internal Thread, 47.5 mm
1182	Spacer External Bearings 9.4 mm
1183	Folding Block
1186	Brake Spring
1187	Brake Bolt
1188	Brake With Spring And Bolt White
1191	Lower Clamp
1196	Kick Stand With Screws Silver
4705	Kick Stand With Screws Black
1198	Push Button, Silver
1218	Holder Plates Left And Right
1219	Brake Plate
1220	Brake With Spring And Bolt Black
4100	Brake With Spring And Bolt Silver
1221	Fastening eElements Wheel Back
1222	Lower T-Tube
1223	Steering fork
1224	Front Holder
1225	Deck And Griptape
1226	Griptape Black Orange
4708	Griptape Black
4200	Griptape Midnight Grey
4199	Griptape Pine Green
4212	Griptape Peach
1282	Spacer Between Bearings 24.30 mm

ACCESSORIES

Article No.	Article
1553	Axle Bolt External Thread, 21.5 mm
1578	Lower Clamp, 200 mm, Black Matt
1586/1023	Bolt And Spring T-Bar
1652	Width Nut, 200 mm
4604	Inveter Logic Complete Set Black (CH)
4661	Fender
4939	End Cap Upper Tube
4843	Upper Tube For Neochrome Black

Article No.	Article
AC5010B	Wheel Complete Blister
AC7008B	Brake Complete Blister
AC1007	Single Bearing ABEC 9
AC6001B	High Density Foam Hand Grip
AC6002B	Complete Handgrip, Tube Plug, Shockcord
4328B	Wheel 200mm Airless Green (Single)

SA0049

SA0242

SA0241

SA0253

SA0252

SA0255

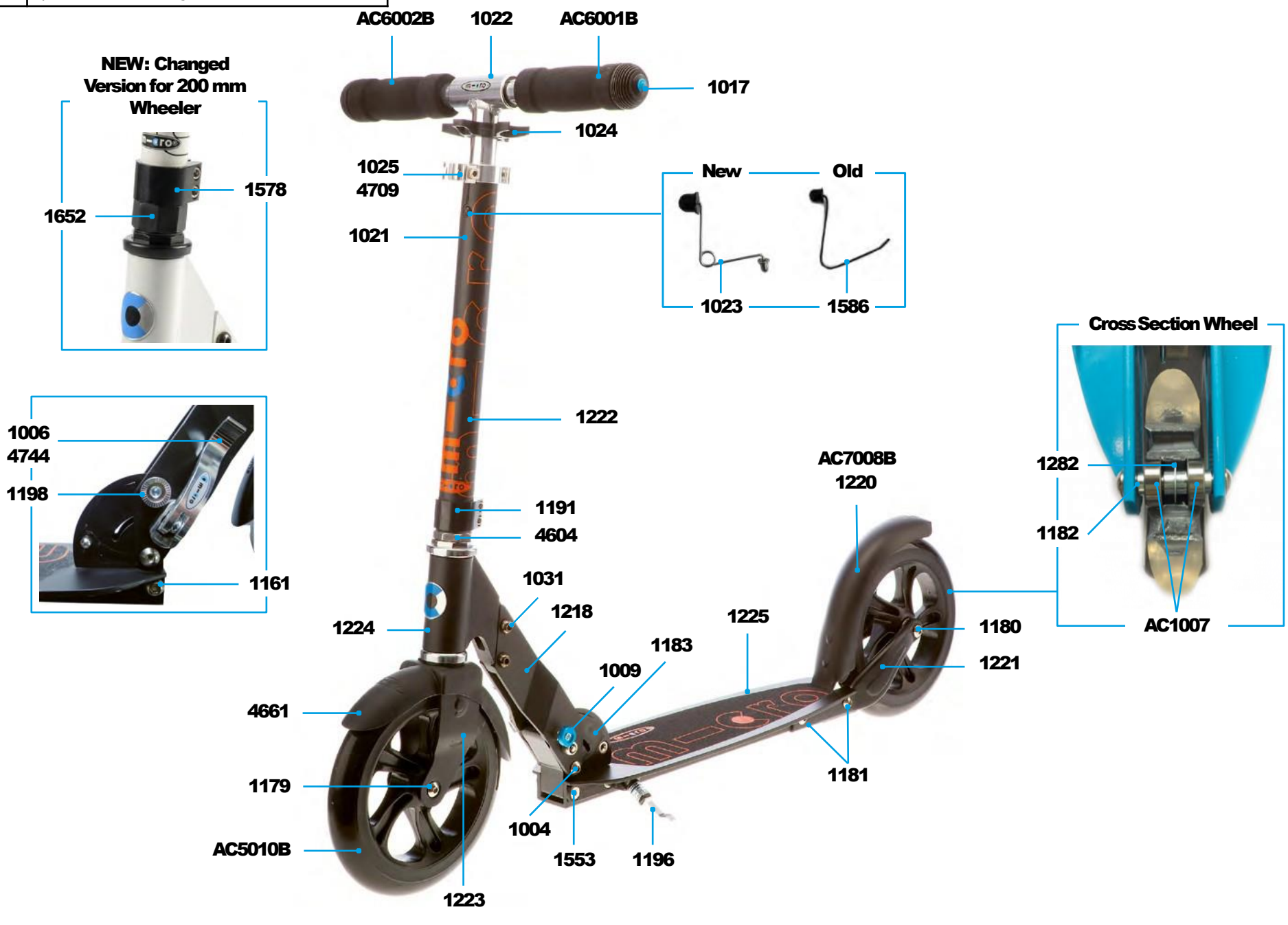

MICRO CLASSIC
SA0034 Black

MICRO CLASSIC BLACK | WHITE INTERLOCK
SA0117 |SA0118

MICRO CLASSIC BLACK | WHITE DELUXE
SA0151 |SA0150

PARTS

Article no.	Article
1195	Griptape
1647	T-Bar
1651	Eye To Attach Shoulder Strap
1652	Width Nut, 200 mm
1858	Fork With Suspension Complete White Deluxe
1859	Fork With Suspension Complete black Deluxe
1871	Vibram Griptape
1888	Fender Black Deluxe
4655	Complete T-Bar With Lower Tube Black Deluxe
4656	complete T-Bar With Lower Tube White Deluxe

ACCESSORIES

Article No.	Article
AC5010B	Wheel Complete Blister
AC7008B	Brake Complete Blister
AC1007	Bearing 1 Piece ABEC 9
AC5009B	Wheel White, Complete Blister
AC6001B	Foam Handles Blister
AC6002B	Complete Handgrip, Tube Plug, Shockcord
AC7007B	Brake White, Complete Blister

SA0117

SA0118

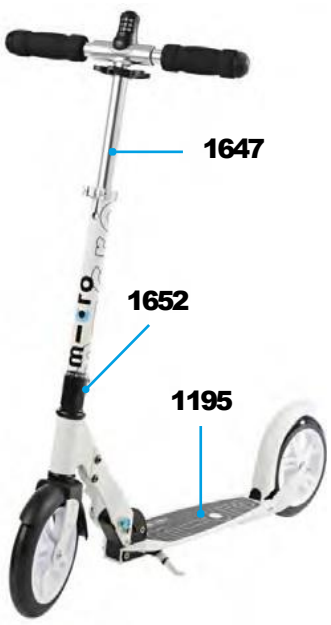

SA0151

SA0150

MICRO CLASSIC BLACK | WHITE INTERLOCK
SA0117 / SA0118
MICRO CLASSIC BLACK | WHITE DELUXE
SA0151 / SA0150

MICRO SUSPENSION

PARTS

Article No.	Article
1017	Tube Plug With Shockcord
3099	Handle Bar Cap With Screws
3100	Handle Bar
3101	Bar With Spring And Bolt
3102	Plastic Linkage Tube
3103	Quick-Acting Clamp
3104	Lower T-Tube
3105	Lower Clamp
3106	Complete Headset
3107	Steering Head
3108	Round Socket Head Cap, Rebound Washer
3109	Dust Protection
3110	Screws Suspension
3111	Steering Fork Complete
3112	Fender Front Wheel With Screws
3113	Axle
3115	Bolt For Holder Plates
3116	Push Button, Silver
3118	Sleeves/Spacer Back Suspension
3122	Brake Plate
3124	Bolt For Brake
3125	Axle Back Wheel
3126	Steering Fork Complete incl. Fender
3301	Quick Release Folding
3128	Kickstand With Two Screws
3130	Spring Complete
3131	Rear Fork With Brake No Wheel
3132	Step Screw
3133	Brake Pin
3134	Griptape
3223	Griptape New
3135	Bolt And Spring T-Bar
3199	Brake Pad

ACCESSORIES

Article No.	Article
3198	Brake Spring
3218	Deck With Griptape
3219	Griptape
3220	Holder Plates (Left) | Holderplates (Right)
3221	Steering Head Black
3222	Lower Tube
6147	Folding Block
6148	Holder Plates Left And Right

Article No.	Article
AC6001B	High Density Foam Hand Grip
AC5010B	Wheel Complete Blister

SA0297

SA0156

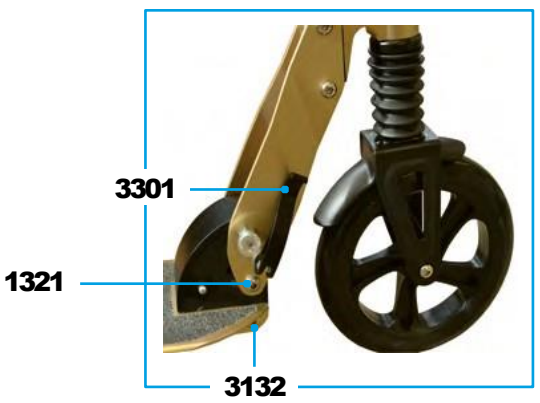

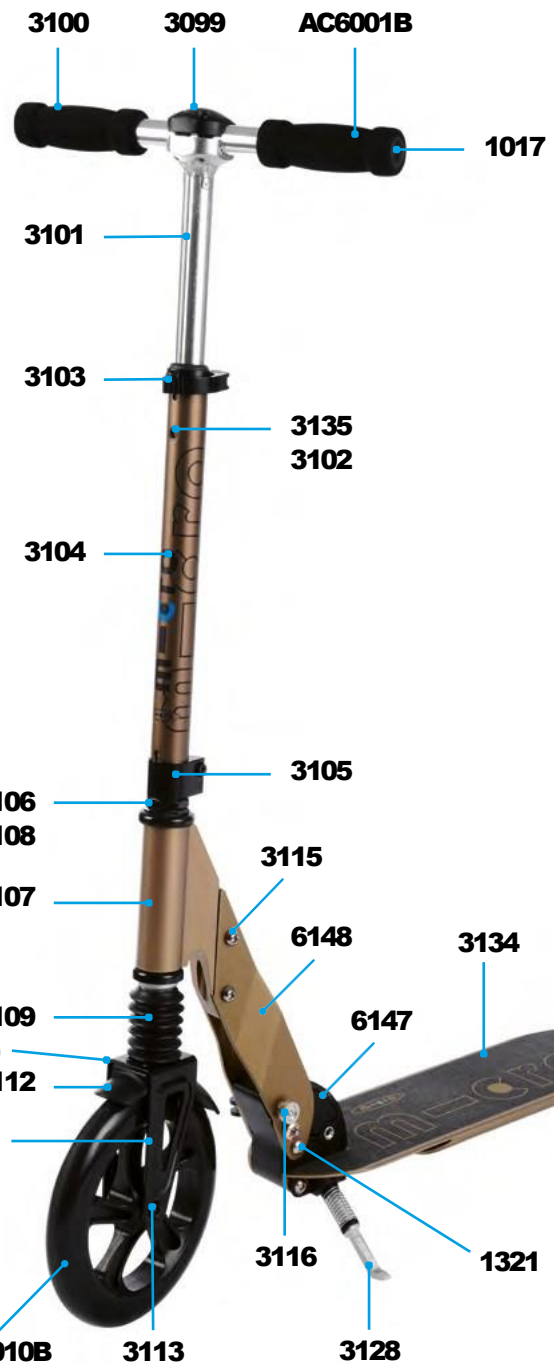

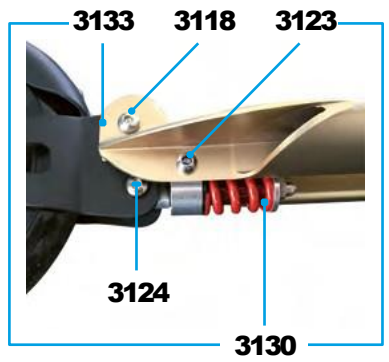

MICRO FLEX WITH KICKSTAND

PARTS

Article No.	Article
1001	Axle Bolt Internal Thread, 40 mm
1002	Axle Bolt Internal Thread, 49 mm
1004	Axle Bolt Internal Thread, 44 mm
1006	Locking Complete, Scooter
1007	Holder Plates Left And Right, Flex, Silver
1009	Push Button, Blue
1013	Brake Spring
1014	Brake Bolt
1017	Plugs, Handle Bolt, Rubber Strip
1021	Plastic Linkage Tube
1022	T-Tube
1024	Multimountclip
1025	Quick-Acting Clamp, Silver
1026	Lower Clamp, Silver
1027	Steering Fork
1028	Front Holder, Silver
1029	Inverter Logic Complete
1031	Axle Bolt Internal Thread,19 mm
1032	Deck And Griptape, Silver
1033	Board Fixation Plates For Deck
1034	Countersunk Screw, 23 mm
1035	Spacer Between Bearings 19.6 mm
1198	Push Button, Silver
1242	Brake Plate, Silver
1244	Back Part Complete No Wheel With Brake, Silver
1325	Folding Block, Silver
1341	Griptape
1453	Kick Stand Without Screws, 200 mm
1586/1023	Bolt And Spring T-Bar

ACCESSORIES

Article No.	Article
AC6001B	High Density Foam Hand Grip
AC6002B	Complete Handgrip, Tube Plug, Shockcord
AC5007B	Wheel Complete Blister
AC7005B	Brake Complete Blister
AC1001B	Single Bearing ABEC 7

COLOURS

Article No. And Colour	Brake	Holder Plates	Lower T-Tube	Steering Head	Folding Block With Kickstand	Back Part With Brake No Wheel
SA0107 Sapphire Blue	1506	1507	1508	1509	1510	1511
SA0106 Pink	1500	1501	1502	1503	1504	1505

SA0107

SA0106

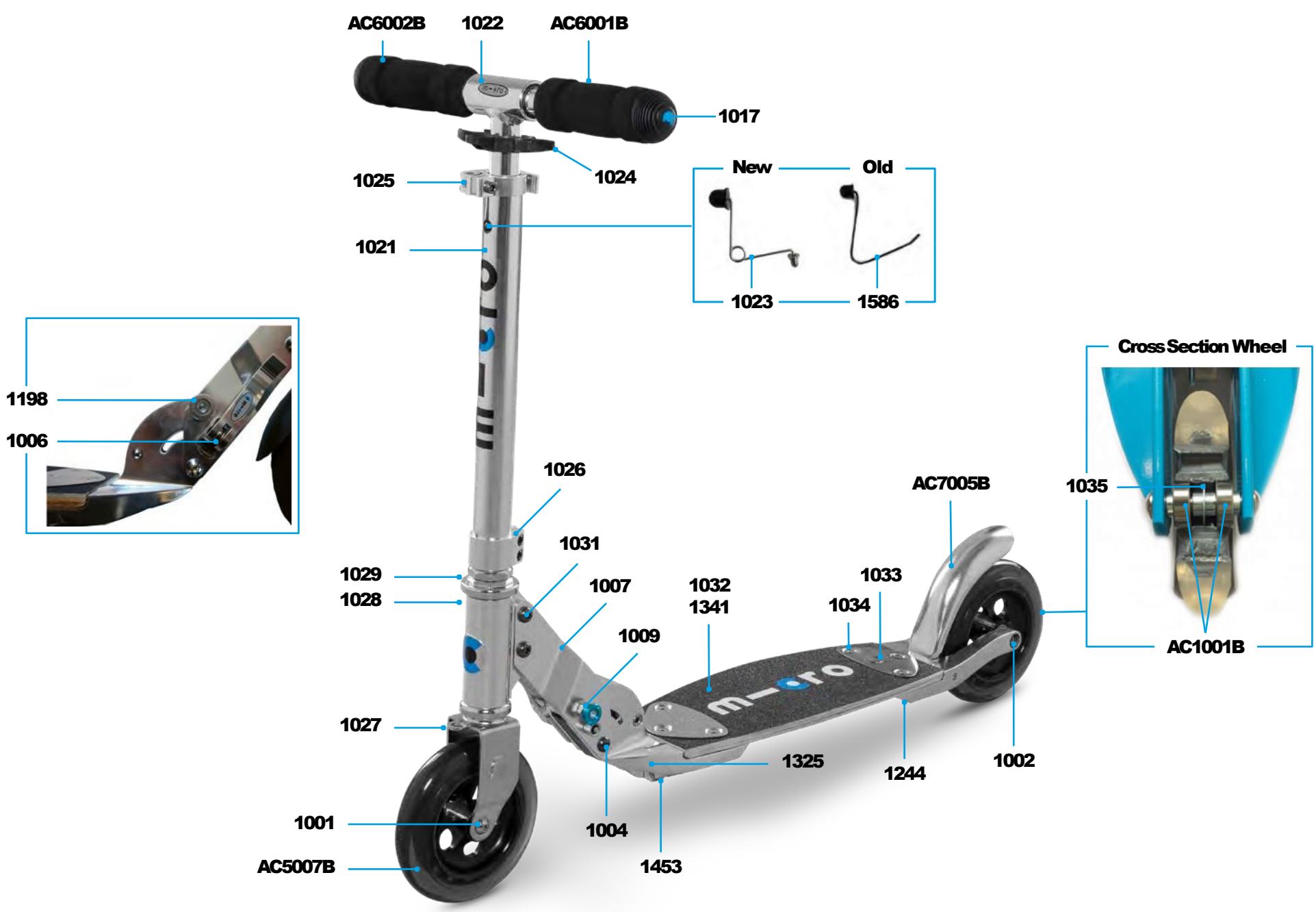

MICRO LADY FLEX

PARTS

Article No.	Article
1001	Axle Bolt Internal Thread, 40 mm
1002	Axle Bolt Internal Thread, 49 mm
1004	Axle Bolt internal Thread, 44 mm
1006	Locking Complete
1009	Push Button, Blue
1029	Inveter Logic Complete Set (CH)
1031	Axle Bolt Internal Thread,19 mm
1033	Board Fixation Plates For Deck
1034	Countersunk Screw, 23 mm
1035	Spacer Between Bearings 19.6 mm
1198	Push Button, Silver
1453	Kick Stand Without Screws, 200 mm
1457	Folding Block
1458	Holder Plates Left And Right
1461	Brake Spring
1462	Brake Bolt
1463	Brake Complete
1464	Back Part Complete No Wheel With Brake
1465	Lower T-Tube
1466	Plastic Linkage Tube
1467	T-Tube
1468	Lower Clamp
1469	Steering Fork
1470	Front Holder
1471	Deck And Griptape
1472	Griptape
1456	Quick-Acting Plastic, Black
1473	Fender
1586/1023	Bolt And Spring Handlebar
1621	Swiss Cap Small

ACCESSORIES

Article No.	Article
AC9012	Interchangeable Bar
AC5007B	Wheel Complete Blister
AC1007	Single Bearing ABEC 9

MICRO FLEX / AIR

PARTS

Article No.	Article
1004	Axle Bolt Internal Thread, 44 mm
1006	Locking Complete
1009	Push Button, Blue
1017	Plugs, Handle Bolt, Rubber Strip
1021	Plastic Linkage Tube
1022	T-Tube
1024	Multimountclip
1025	Quick-Acting Clamp, Silver
1026	Lower Clamp, Silver
1031	Axle Bolt Internal Thread,19 mm
1033	Board Fixation Plates For Deck
6194	Countersunk Screw, 29 mm
1179	Axle Bolt Internal Thread, 43 mm
1198	Push Button, Silver
1321	Axle Bolt Internal Thread, 55 mm
1327	Spacer
1329	Brake Plate, 200 mm, Silver
1330	Rear End With Brake, 200 mm
1341	Griptape
1453	Kick Stand Without Screws, 200 mm
1495	Air Tube
1538	Spacer Between Bearings 10.3 mm
1586/1023	Bolt And Spring T-Bar
1652	Width Nut, 200 mm, Black
1603	Brake Bolt
1604	Brake Spring
4604	Inveter Logic Complete Set (CH)
4661	Fender, Black

ACCESSORIES

Article No.	Article
AC6001B	High Density Foam Hand Grip
AC6002B	Complete Handgrip, Tube Plug, Shockcord
AC5012B	Air Wheel Complete Blister
AC5010B	PU Wheel
AC1007	Single Bearing ABEC 9

COLOURS

Article No. and Colour	Lower Clamp	Folding Block	Griptape	Brake Plate	Fork	Rear Fork	Brake Old	Deck
SA0035 Air Silver	1578	1325	1341	1821	1326	1405	1329	
SA0038 Blue	1026	1381	1577	1820	1385	1406	1329	4668
SA0119 Black	1578	1572	1577	1601	1576	1575		4668
SA0120 Aubergine	1578	1580	1585	1602	1584	1583		4666
SA0176 Cream	1578	4560	1589	4559	4564	4558		4667

SA0038 **SA0119** **SA0120** **SA0176**

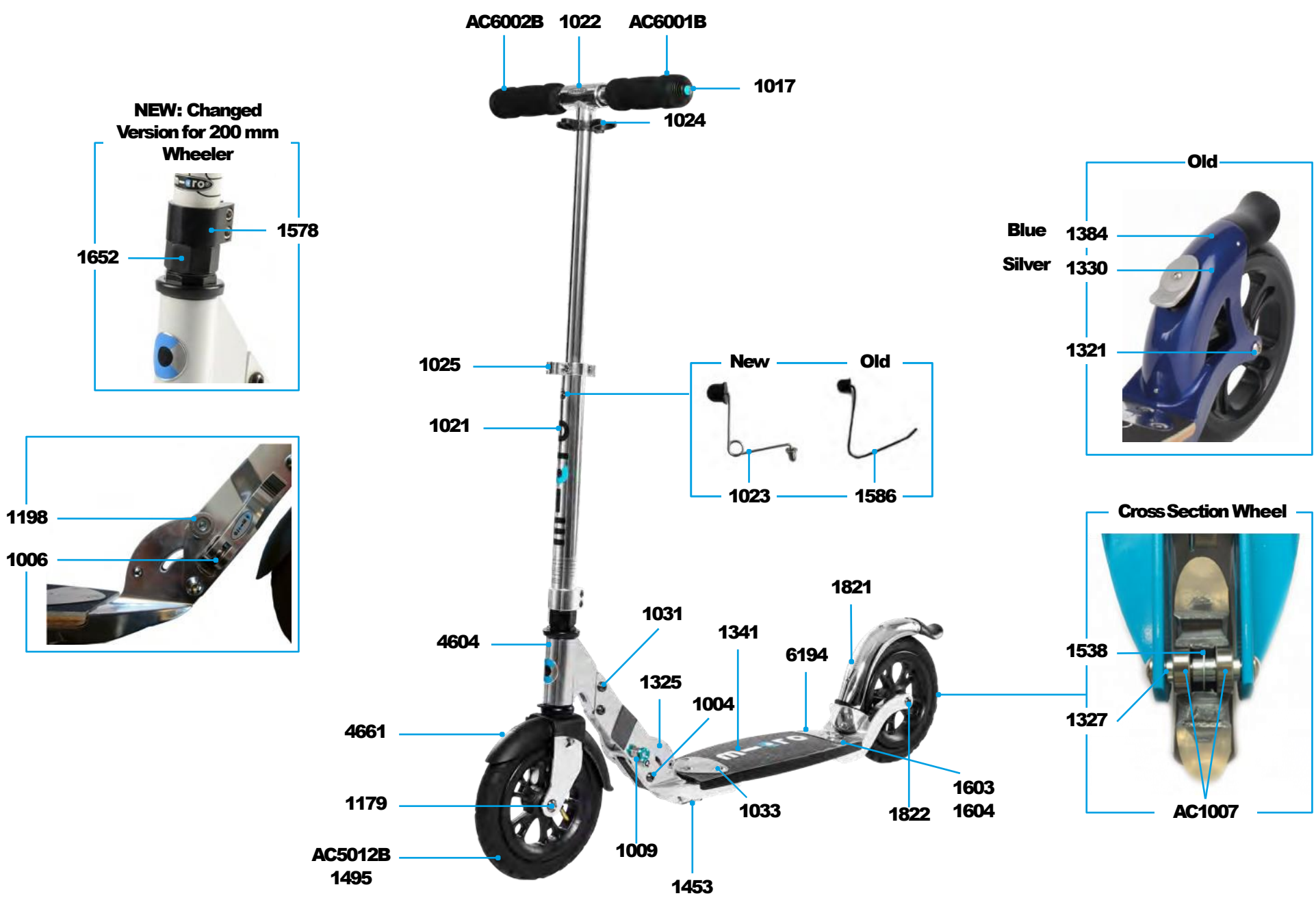

MICRO SPEED

PARTS

Article No.	Article
1001	Axle Bolt Internal Thread, 40 mm
1004	Axle Bolt Internal Thread, 44 mm
1006	Locking Complete Silver
4744	Locking Complete Black
1009	Push Button, Blue
1017/4835	Plugs Handle Bolt Rubber Strip
1021	Plastic Linkage Tube
1022	T-Tube
1024	Multimountclip
1025	Quick-Acting Clamp, Silver
4709	Quick-Acting Clamp, Black
1027	Steering Fork Silver
4105	Steering Fork Black
1029	Headset Silver
4703	Headset Black
1031	Axle Bolt Internal Thread,19 mm
1161	Axle Bolt External Thread, 10.5 mm
1181	Axle Bolt Internal Thread, 47.5 mm
1182	Spacer External Bearings 9.4 mm
1187	Brake Bolt
1198	Push Button, Silver
1204	Griptape
1205	Axle Bolt Internal Thread, 59 mm
1206	Folding Block, Grey
1207	Holder Plates Left And Right, Speed
1210	Fastening Elements Silver
4106	Fastening Elements Black
1211	Lower T-Tube
1212	Lower Clamp, Grey
1213	Front Holder
1333	Spacer Between Bearings 21.3 mm
1412	Brake Plate
1413	Brake Spring
4107	Brake Complete Black
1553	Axle Bolt External Thread, 21.5 mm
1196	Kick Stand With Screws
4815	Kick Stand With Screws Black
1586/1023	Bolt And Spring T-Bar

ACCESSORIES

Article No.	Article
AC6001B	High Density Foam Hand Grip
AC6002B	Complete Handgrip, Tube Plug, Shockcord
AC5008B	Wheel 145mm Smoke
4163B	Wheel 145mm Black
AC7013B	Brake Complete Blister
AC1007	Single Bearing ABEC 9

COLOURS

Article No. And Colour	Folding Block	Holder Plates	Lower T-Tube	Lower Clamp	Front Holder	Griptape	Wheel
SA0121 Pattern Black	1555	1556	1557	1558	1559	1561	AC5008B
SA0122 Mint	1563	1564	1565	1566	1567	1569	AC5015B
SA0142 Pure Silver	1680	1678	1676	1026	1678	1214	AC5008B
SA0244 Matt Neochrome	7112			1191		4708	4163B

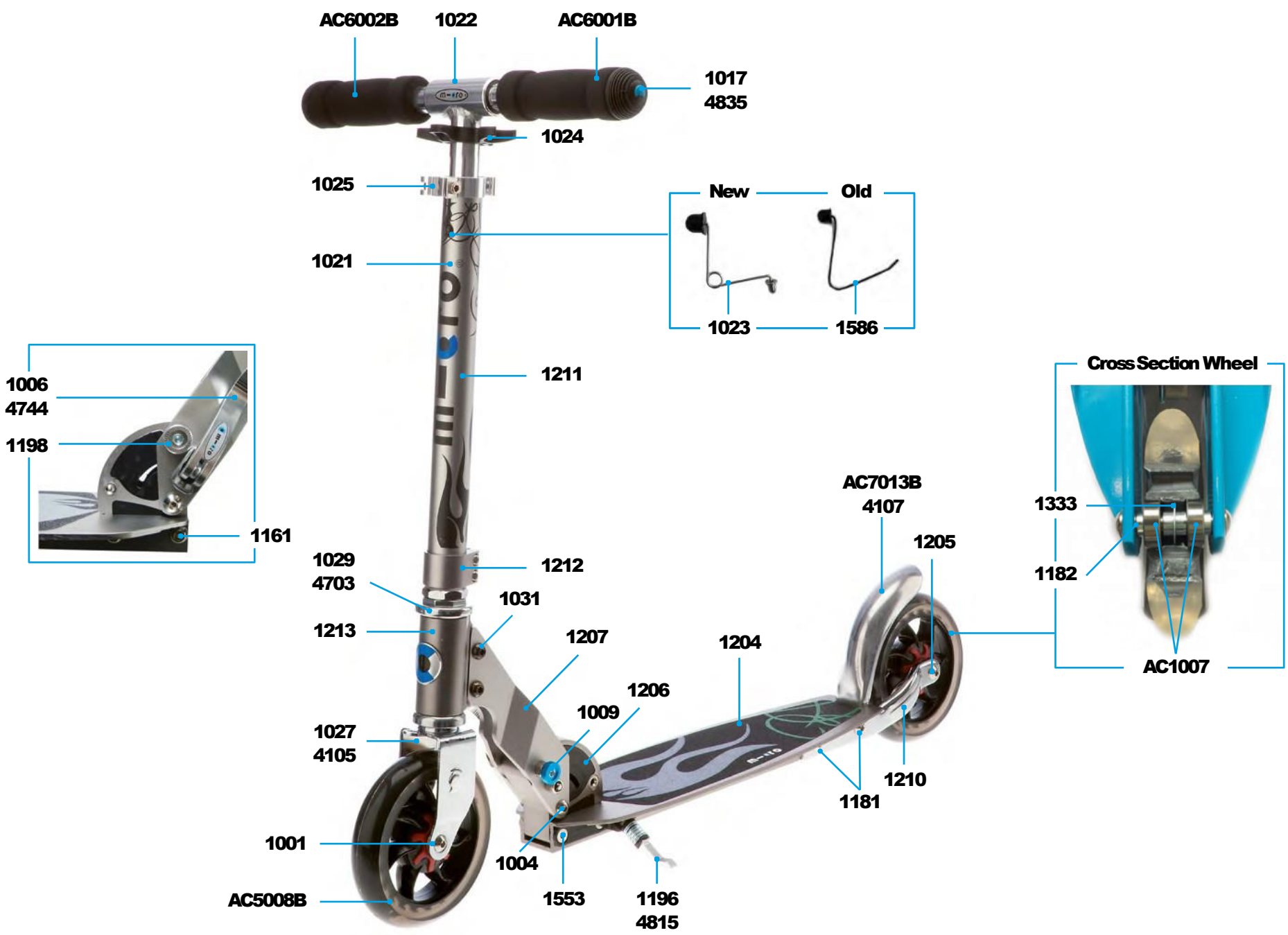

MICRO SPEED
SA0033

MICRO SPEED DELUXE

PARTS

Article No.	Article
1004	Axle Complete
1023	Bolt & Spring T-Bar Plastic
1031	Axle Bolt Internal Thread,19 mm
1161	Axle Bolt External Thread, 10.5 mm
1181	Axle Bolt Internal Thread, 47.5 mm
1191	Lower Clamp, Black
1198	Push Button, Silver
1205	Axle Bolt Internal Thread, 59 mm
1553	Axle Bolt External Thread, 21.5 mm
4697	Clamp For T-Bar
4708	Griptape
4709	Quick Acting Clamp Black
4744	Folding Quick Release - Black
4756	Headset Micro Speed Deluxe
4812	180mm Wheel Smoke
4813	Handlebar With Clamp
4814	Fender Speed Deluxe
4815	Kick Stand With Screws, Speed Deluxe
4835	Handlebar End Caps
4841	Axle Bolt Internal Thread, 37mm
4912	Rear Fork Speed Deluxe
4913	Brake Complete Clay
4914	Front Fork Speed Deluxe Clay
4931	Brake Complete Neon Rose
4932	Brake Complete Alaskan Blue
4933	Front Fork Speed Deluxe Neon Rose
4934	Front Fork Speed Deluxe Alaskan Blue
7112	Folding Block
4939	End Cap Upper Tube
4843	Upper Tube Black

ACCESSORIES

Article No.	Article
AC6001B	High Density Foam Hand Grip
AC1007	Single Bearing ABEC 9

SA0213

SA0214

MICRO SPEED DELUXE
SA0211

MICRO BULLET

PARTS

Article No.	Article
1001	Axle Bolt Internal Thread, 40 mm
1004	Axle Bolt Internal Thread, 44 mm
1017	Plugs, Handle Bolt, Rubber Strip
1021	Plastic Linkage Tube
1022	T-Tube
1024	Multimountclip
1025	Quick-Acting Clamp, Silver
1026	Lower Clamp, Silver
1029	Inverter Logic Complete
1031	Axle Bolt Internal Thread,19 mm
1038	Axle Bolt Internal Thread, 30 mm
1040	Folding Block
1041	Locking Complete
1045	Axle Bolt Internal Thread, 33 mm
1046	Brake Plate
1047	Brake Spring
1048	Brake Bolt
1050	Lower T-Tube
1051	Steering Fork
1052	Front Holder
1054	Griptape
1055	Spacer Between Bearings 10.25 mm
1196	Kick Stand With Screws
1198	Push Button, Silver
1553	Screw For Kickstand
1586/1023	Bolt And Spring T-Bar

ACCESSORIES

Article No.	Article
AC6001B	High Density Foam Hand Grip
AC6002B	Complete Handgrip, Tube Plug, Shockcord
AC5006B	Wheel Complete Blister
AC7004B	Brake Complete Blister
AC1007	Single Bearing ABEC 9

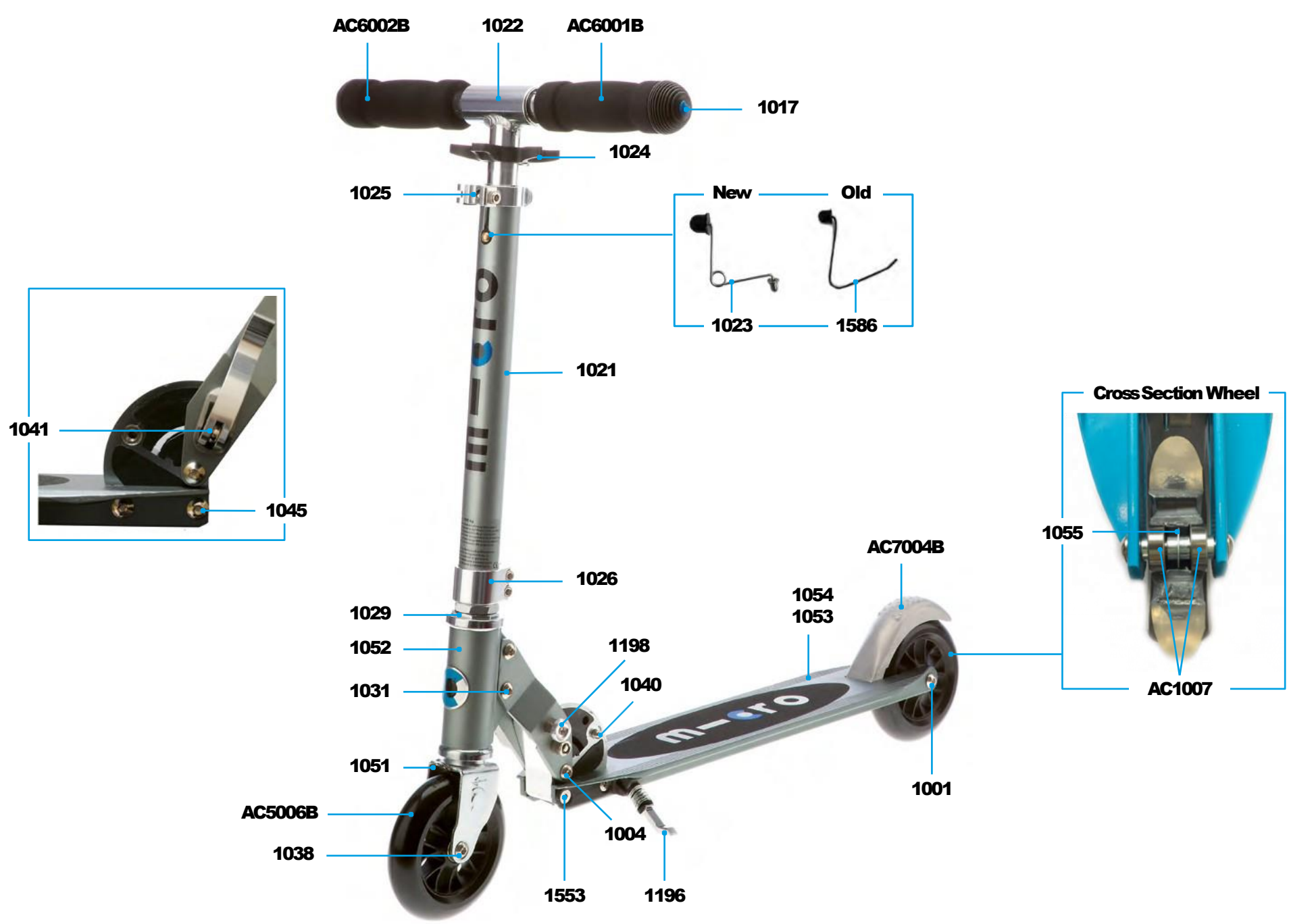

MICRO MONSTER BULLET

PARTS

Article No.	Article
1004	Axle Bolt Internal Thread, 44 mm
1006	Locking Complete
1008	Push Button
1009	Push Button
1017	Plugs, Handle Bolt, Rubber Strip
1021	Plastic Linkage Tube
1022	T-Tube
1024	Multimountclip
1025	Quick-Acting Clamp, Silver
1029	Inverter Logic Complete
1031	Axle Bolt Internal Thread,19 mm
1035	Spacer Between Bearings 19.6 mm
1055	Spacer Between Bearings 10.25 mm
1082	Axle Bolt Internal Thread, 70 mm
1086	Brake Plate
1087	Brake Spring
1091	Lower T-Tube
1092	Lower Clamp, Red
1093	Steering Fork
1094	Front Holder
1096	Griptape
1158	Folding Block Red
1159	Holder Plates Left And Right
1160	Fastening Elements, Wheel Back
1161	Axle Bolt External Thread, 10.5 mm
1181	Axle Bolt Internal Thread, 47.5 mm
1196	Kick Stand With Screws
1208	Brake Bolt
1553	Axle Bolt External Thread, 21.5 mm
1586/1023	Bolt And Spring T-Bar

ACCESSORIES

Article No.	Article
AC6001B	High Density Foam Hand Grip
AC6002B	Complete Handgrip, Tube Plug, Shockcord
AC5001B	Wheel Back Complete Blister
AC7006B	Brake Complete Blister
AC1007	Single Bearing ABEC 9

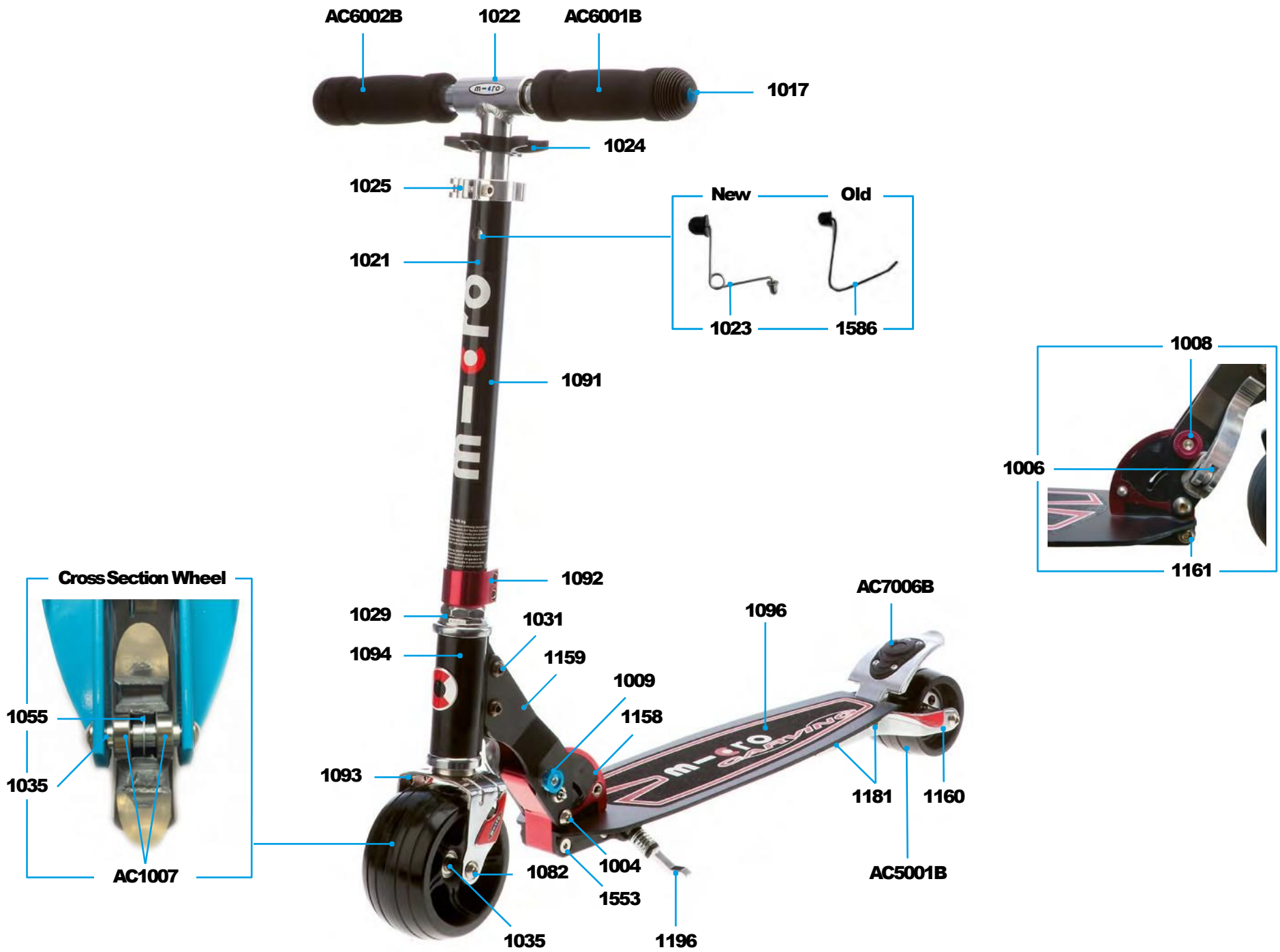

MICRO ROCKET

PARTS

Article No.	Article
1004	Axle Bolt Internal Thread, 44 mm
1006	Locking Complete
1017	Plugs, Handle Bolt, Rubber Strip
1021	Plastic Linkage Tube
1022	T-Tube
1024	Multimountclip
1025	Quick-Acting Clamp, Silver
1029	Inverter Logic Complete
1031	Axle Bolt Internal Thread,19 mm
1035	Spacer Between Bearings 19.6 mm
1055	Spacer Between Bearings 10.25 mm
1082	Axle Bolt Internal Thread, 70 mm
1086	Brake Plate
1087	Brake Spring
1093	Steering Fork
1161	Axle Bolt External Thread, 10.5 mm
1181	Axle Bolt Internal Thread, 47.5 mm
1183	Folding Block, Black
1191	Lower Clamp, Black
1196	Kick Stand With Screws
1197	Holder Plates Left And Right
1198	Push Button, Silver
1199	Push Button, Green
1200	Fastening Elements Wheel Back
1201	Lower T-Tube
1202	Front Holder, Green
1203	Deck And Griptape, Green
1204	Griptape
1208	Brake Bolt
1553	Axle Bolt External Thread, 21.5 mm
1586/1023	Bolt And Spring T-Bar

ACCESSORIES

Article No.	Article
AC6001B	High Density Foam Hand Grip
AC6002B	Complete Handgrip, Tube Plug, Shockcord
AC7006B	Brake Complete Blister
AC1007	Single Bearing ABEC 9

COLOURS

Article No. And Colour	Holder Plater Left And Right	Lower T-Tube	Deck And Griptape	Griptape	Front Holder
SA0143 Blue Sky	1663	1664	1666	1667	1665
SA0048 Black	1864	1866	1863	1667	1865

SA0143

SA0048

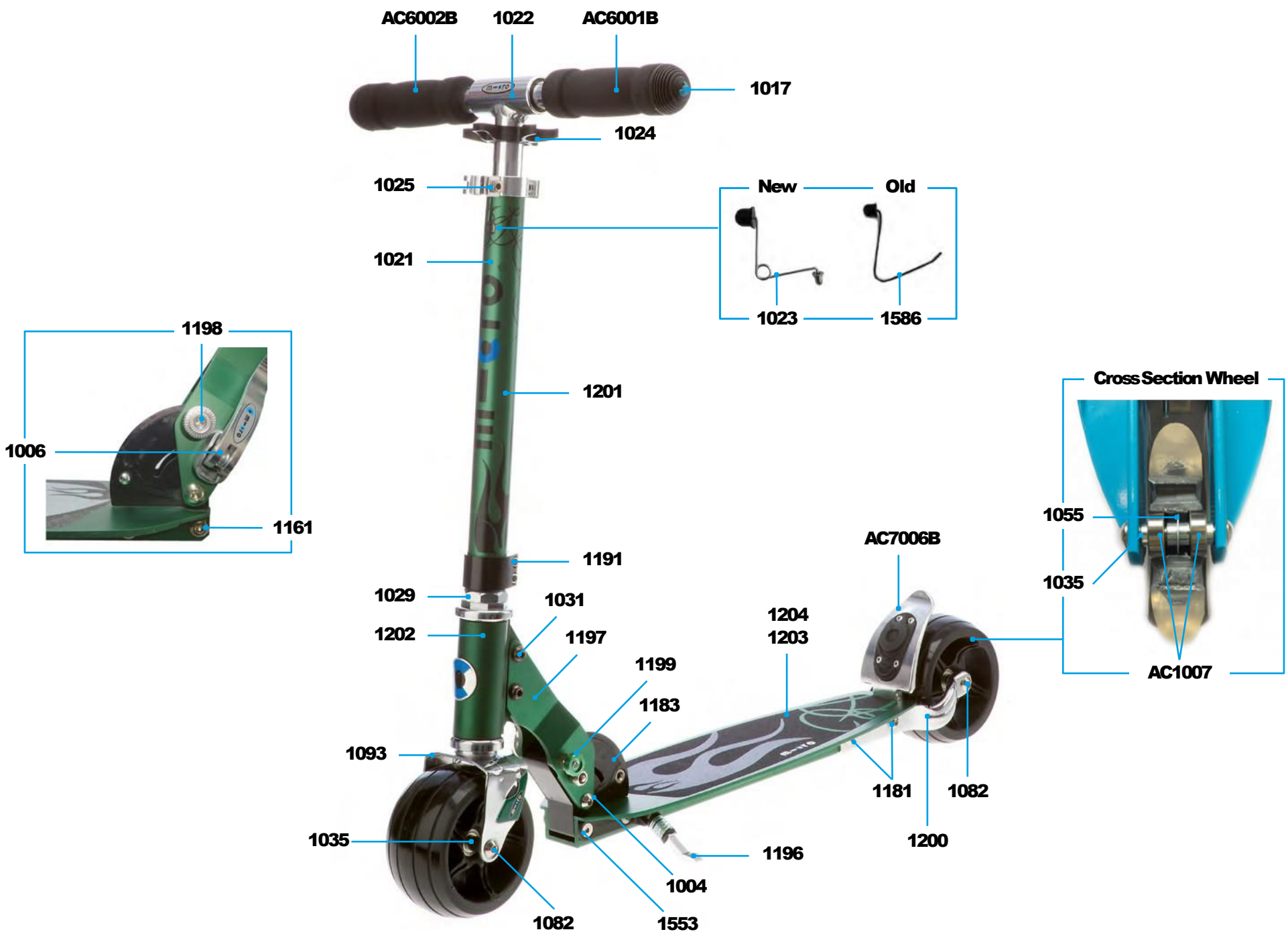

MICRO ROCKET
SA0032

MICRO ROCKET DELUXE

PARTS

Article No.	Article
1004	Axle Bolt Internal Thread, 44 mm
4744	Folding Quick Release Complete
4813	Handlebar With Clamp
1021	Plastic Linkage Tube
4709	Quick Acting Clamp Black
4703	Headset Complete
1031	Axle Bolt Internal Thread, 19 mm
4845	Spacer Between Bearings, 20 mm
1055	Spacer Between Bearings, 10.25 mm
1082	Axle Bolt Internal Thread, 70 mm
4844	Brake Plate
4846	Steering Fork
4843	T-Tube
1161	Axle Bolt External Thread, 10.5 mm
1181	Axle Bolt Internal Thread, 47.5 mm
1183	Folding Block, Black
4593	Lower Clamp, Black
1196	Kick Stand With Screws
1009	Blue Pushbutton
4848	Lower T-Tube Neon Rose
4849	Lower T-Tube Alaskan Blue
4847	Fastening Elements Wheel Back
4708	Griptape
4836	Brake Bolt
1553	Axle Bolt External Thread, 21.5 mm
1023	Bolt & Spring T-Bar Plastic
4835	Handlebar End Caps
4939	End Cap Upper Tube

ACCESSORIES

Article No.	Article
AC6001B	High Density Foam Hand Grip
AC1007	Single Bearing ABEC 9

SA0234

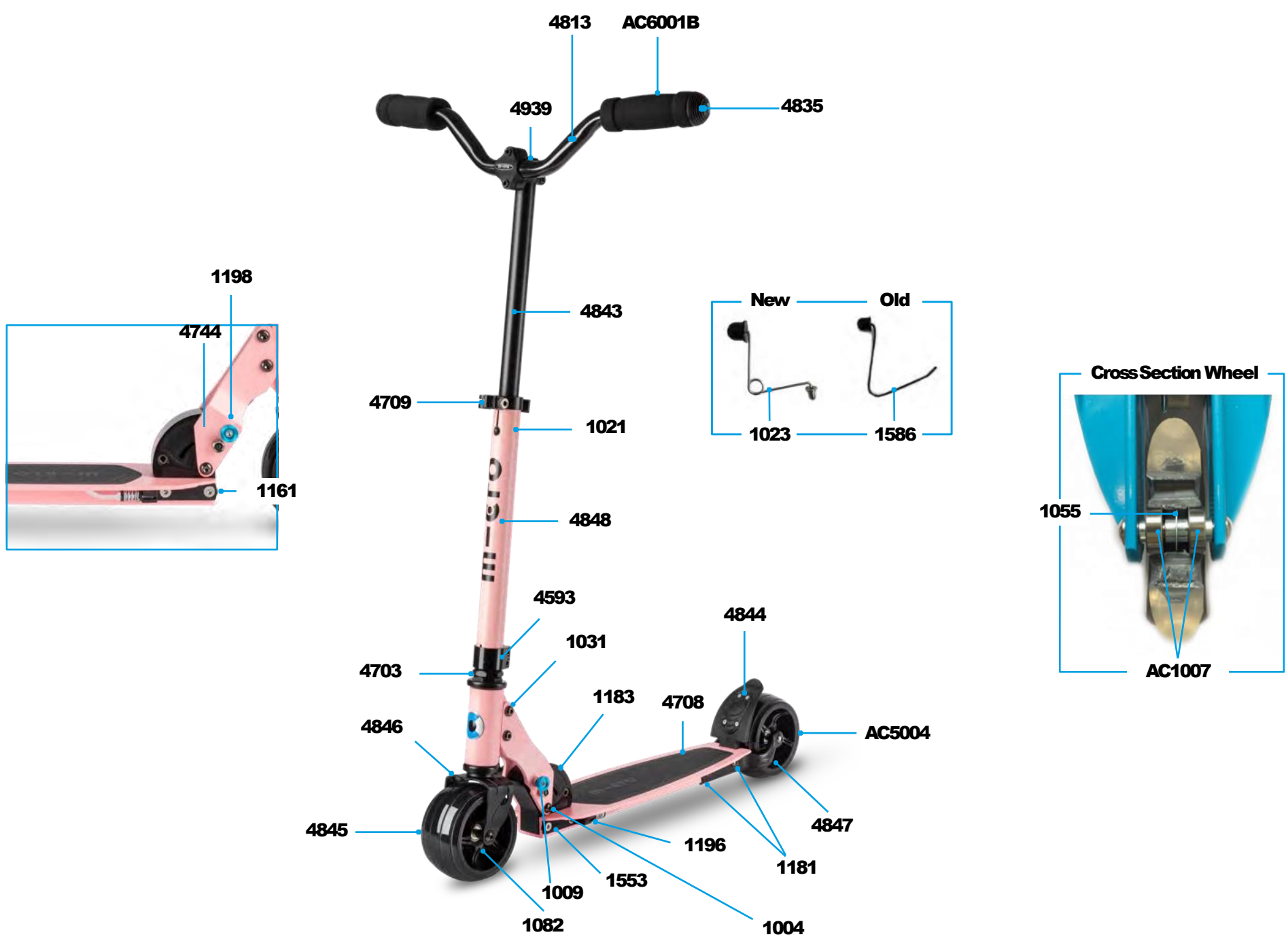

MICRO SPRITE

PARTS

Article No.	Article
1001	Axle Bolt Internal Thread, 40 mm
1004	Axle Bolt Internal Thread, 44 mm
1017	Plugs, Handle Bolt, Rubber Strip
1021	Plastic Linkage Tube
1022	T-Tube
4103	Chopper T-Bar Complete Black
1024	Multimountclip
1025	Quick-Acting Clamp, Silver
4709	Quick-Acting Clamp, Black
1026	Lower Clamp, Silver
4102	Lower Clamp, Black
1029	Inverter Logic Complete Silver
4703	Inverter Logic Complete Black
1031	Axle Bolt Internal Thread,19 mm
1038	Axle Bolt Internal Thread, 30 mm
1039	Spacer External Bearings, 3.4 mm
1041	Locking Complete Silver
4744	Locking Complete Black
1045	Axle Bolt Internal Thread, 33 mm
1046	Brake Plate
1047	Brake Spring
1048	Brake Bolt
1051	Steering Fork
1054	Griptape
1055	Spacer Between Bearings 10.25 mm
1056	Holder Plates Left And Right, Silver
1057	Lower T-Tube, Silver
1058	Deck And Griptape, Silver
1155	Front Holder, Silver
1196	Kick Stand With Screws
4705	Kick Stand With Screws
1198	Push Button, Silver
1553	Screw For Kickstand
1586/1023	Bolt And Spring T-Bar
4749	Front Wheel Axle And Spacer For Led Sprite
4762	Rear Wheel Axle And Spacer For Led Sprite
4706	Brake Black
4943	Fork Black

ACCESSORIES

Article No.	Article
AC1007	Single Bearing ABEC 9
AC6001B	Foam Handles Black Box
AC6002B	Foam Handles Complete With Tube Plugs Black Box
4128B	Cork Handles Complete With Tube Plugs Box
4129B	Rubber Handles Complete With Tube Plugs Box
4130B	Rubber Handles Black Box
4131	Rubber Handles Black
AC5003B	Wheel Back Complete Blister 100 mm Box
AC5005B	Front Wheel Complete Blister 120 mm Box
AC7004B	Brake Complete Blister
AC9070	LED Wheel 100 mm
AC9071	LED Wheel 120 mm
AC9070B	LED Wheel 100mm Box
AC9071B	LED Wheel 120mm Box
4944	LED Wheel 120mm Black
4944B	LED Wheel 120mm Black Box
4109B	LED Wheel 120mm Green ECO Box
4137B	LED Wheel 120mm Pearl Box
4214B	LED Moon Wheel 120mm Glow Blue

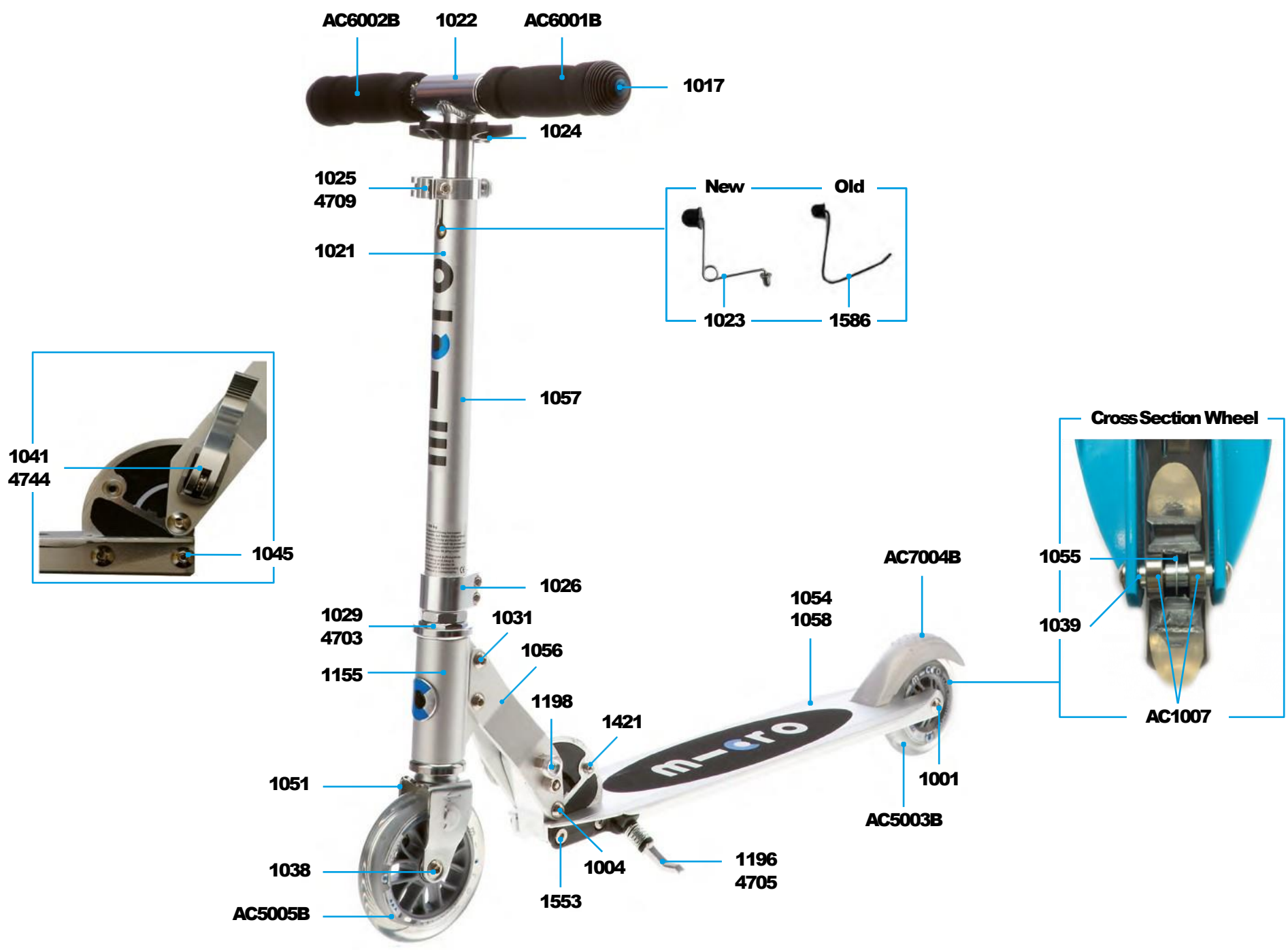

MICRO SPRITE / MICRO SPRITE LED

COLOURS

Article No. And Colour	Front Holder	Holder Plates	Deck And Griptape	Lower T-Tube	Lower Clamp	Folding Block	Griptape
SA0024 Oasis Blue	1404	1403	1402	1401	1026	1421	1054
SA0025 Red	1364	1363	1362	1360	1365	1361	1054
SA0026 Black SA0225 Black LED	1369	1368	1367	1366	1026	1421	1054
SA0027 Pink SA0226 Pink LED	1374	1373	1372	1370	1026	1421	1054
SA0084 Sapphire Blue SA0231 Sapphire Blue LED	1434	1429	1431	1430	1433	1432	1054
SA0056 Purple	1477	1474	1476	1475	1026	1421	1054
SA0132 Purple Metallic	1684	1681	1683	1682	1026	1421	1054
SA0133 Black Stripe	1775	1778	1776	1774	1026	1421	1777
SA0134 Teal Owl	1780	1783	1781	1779	1026	1421	1782
SA0135 Blue Aztec	1434	1429	1786	1430	1433	1432	1787
SA0136 Raspberry Floral Dot	1789	1792	1790	1788	1026	1421	1791
SA0139 Teal Tribal	1780	1783	1784	1779	1026	1421	1785
SA0178 Red Stripe	4549	4548	4547	4550	1026	1421	4556
SA0137 Purple Stripe SA0219 Purple Stripe LED	1684	1681	1793	1682	1026	1421	1794
SA0177 Blue Stripe SA0217 Blue Stripe LED	4545	4544	4543	4546	1026	1421	4555
SA0179 Petrol Stripe SA0218 Petrol Stripe LED	4553	4552	4551	4554	1026	1421	4557
SA0209 Autum red LED	4752	4751	4747	4746	1026	1421	1054
SA0210 Ocean Blue LED	4760	4761	4759	4758	1026	1421	1054
SA0208 Forest green LED	4757	4750	4748	4745	1026	1421	1054
SA0224 Chartreuse LED	1770	1773	1771	1769	1026	1421	1772
SA0235 Neon Rose LED					1026	1421	1054
SA0216: Silver Matt LED					1026	1421	1054
SA0237: Neochrome LED					4942	4702	1054
SA0243: Neochrome Black LED					4102	4702	4701
SA0250: ECO Green LED					4704	4702	4126
SA0293: Pearl Blue Purple LED					4132	4702	4701
SA0294: Pearl Green Purple LED					4133	4702	4701
SA0296: Glow LED					4704	4702	4213
SA0295: Silverchorme LED					4704	4702	4215

SA0133

SA0134

SA0135

SA0136

SA0137

SA0139

SA0219

SA0235

SA0237

SA0250

SA0294

SA0296

SA0177 / SA0217

SA0178

SA0179 / SA0218

SA0209

SA0208

SA0210

SA0224

SA0216

SA0243

SA0293

SA0295

MICRO SPRITE DELUXE

PARTS

Article No.	Article
1001	Axle Bolt Internal Thread, 40 mm
1004	Axle Bolt Internal Thread, 44 mm
1023	Spring With Pushbutton
1031	Axle Bolt Internal Thread,19 mm
1038	Axle Bolt Internal Thread, 30 mm
1045	Axle Bolt Internal Thread, 33 mm
1198	Pushbutton Silver
1553	Screw For Kickstand
4697	Clamp Black
4698	Upper Bar With Clamp
4699	Front Fender Sprite
4701	Griptape Black
4702	Folding Block
4703	Headset Complete
4704	Lower Clamp Black
4705	Kickstand Black
4706	Rear Brake
4709	Clamp Black
4742	Wheel
4744	Folding Quick Release - Black
4789	Set Front Fender And Fork
4939	End Cap Upper Tube
4843	Upper Tube Black

ACCESSORIES

Article No.	Article
4742B	Wheel 120 mm Black Box
AC6003B	Rubber Handles Black
AC9057	Micro Tube Light 291mm

SA0228

SA0229

MICRO SPRITE SUSPENSION

PARTS

Article No.	Article
4110	T-Bar Complete Black
4111	Handgrips With Pushbutton Black
4112	Lower Clamp With Screws Black
4113	Front Fender Black
4114	Rear Brake Black
4115	Front Wheel Axle
4116	Rear Wheel Axle
4117	Front Fork
4118	Front Fork Cover Incl. Sticker Dark Grey
4134	Front Fork Cover Incl. Sticker Light Blue
4135	Front Fork Cover Incl. Sticker Pink
4136	Front Fork Cover Incl. Sticker Olive Green
4119	Fork Cover Sticker
4121	Griptape
4792	Rubber Handgrips Black
4794	Activ Clamp Black
4795	Push Button And Spring
4796	Headset
4797	Dust Protection Black
4857	Side Cover For Folding Mechanism Black
4858	Lever For Folding Mechanism Black

ACCESSORIES

Article No.	Article
AC1007	Single Bearing ABEC 9
4120B	Wheel 145mm Black Box

SA0248

SA0247

SA0246

MICRO SPRITE SUSPENSION
SA0245

MICRO LIGHT

PARTS

Article No.	Article
1001	Axle Bolt Internal Thread, 40 mm
1029	Inverter Logic Complete, Scooter
1038	Axle Bolt Internal Thread, 30 mm
1039	Spacer External Bearings, 3.4 mm
1051	Steering Fork, Bullet
1055	Spacer Between Bearings 10.25 mm
1059	Bolt Folding Mechanism
1060	Locking Complete, Light
1063	Tension Arm With Claw, Light
1064	Brake Plate, Light
1065	Brake Spring, Light
1066	Brake Bolt, Light
1069	Tube For Handle grip, Light
1070	Lower T-Tube, Light, Blue
1072	T-Tube, Light
1073	Bolt And Spring Handlebar, Gold
1074	Quick-Acting Clamp
1075	Lower Clamp
1077	Front Holder, Blue
1079	Deck And Griptape, Blue
1081	Griptape
1055	Spacer Between Bearings, 10.25 mm
1411	Holder For Handgrip

ACCESSORIES

Article No.	Article
AC1007	Single Bearing ABEC 9
AC6003B	High Density Rubber Hand Grip
AC5003B	Wheel Back Complete Blister
AC5005B	Front Wheel Complete Blister
AC7003B	Brake Complete Blister
AC9070	LED Wheel 100 mm
AC9071	LED Wheel 120 mm

COLOURS

Article Nr. And Colour	Steering Head	Lower T-Tube	Deck With Griptape
■ SA0022 Black	1376	1379	1378
■ SA0021 Pink	1078	1071	1080

MICRO EAZY

PARTS

Article No.	Article
6001	Outer Fork
6002	Left Folding Mechanism Complete
6003	Right Folding Mechanism Incl. Spring
6004	Deck With Griptape And Break Mounted
6005	Adjustment Block
6006	Inner Fork Incl. Headset
6007	Lower Bar
6008	T-Bar Complete
6009	Lower Clamp
6010	Quick Release
6011	Handles
6012	Kickstand
6013	Fender
6014	Rear Wheel
6015	Rear Axle
6016	Spacer Rear Wheel
6017	Front Wheel Axle
6018	Plastic Insert For T-Bar
6019	Front Wheel
6116	Brake Eazy

MICRO EAZY
SA0155

MICRO METROPOLITAN / DELUXE

PARTS

Article No.	Article
1004	Axle Bolt Internal Thread, 44 mm
1009	Blue Pushbutton
1023	Spring And Pushbutton
1031	Axle Bolt Internal Thread,19 mm
1161	Axle Bolt External Thread, 10.5 mm
1180	Rear Axle Bolt Internal Thread, 62mm Metropolitan
1224	Front Holder Black
1553	Axle Bolt External Thread, 21.5mm
1578	Lower Clamp, 200 mm, Black Matt
1888	Front Fender
4574	Plastic Linkage Tube
4705	Kickstand Black
4708	Griptape
4709	Quick Active Clamp Black
4715	Foot Brake Complete Metropolitan
4736	T-Bar Metropolitan Deluxe Complete With Brake Lever
4997	T-Bar Metropolitan Complete
4737	Brake Pads Metropolitan
4743	Holder For Handgrip / Holder For Handlebar
4744	Folding Quick Release - Black
4755	Headset Metropolitan Und Metrop Deluxe
4807	Font Axle Bolt Internal Thread, 64mm
4810	Handbrake System Complete
4811	Front Fork With Suspension
4919	Disk (Brake)
4922	Rear Axle Bolt Internal Thread, 74mm Metropolitan Deluxe
4929	Holder Plates Left & Right Metropolitan
4834	Disk Brake Set Complete
4835	Handlebar End Caps
7112	Folding Block

ACCESSORIES

Article No.	Article
AC5010B	Wheel Black 200mm Metropolitan
AC6001B	High Density Foam Hand Grip
AC9056	Tube Light
4990B	Rear Wheel Black 200mm Metropolitan Deluxe Box
AC5016B	Front Wheel Black 200mm Metropolitan Deluxe Box

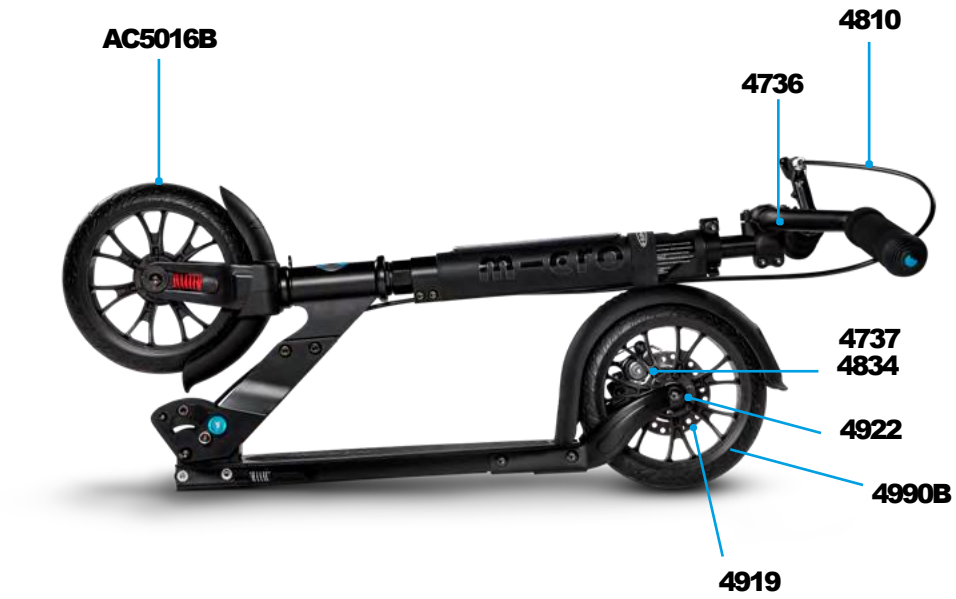

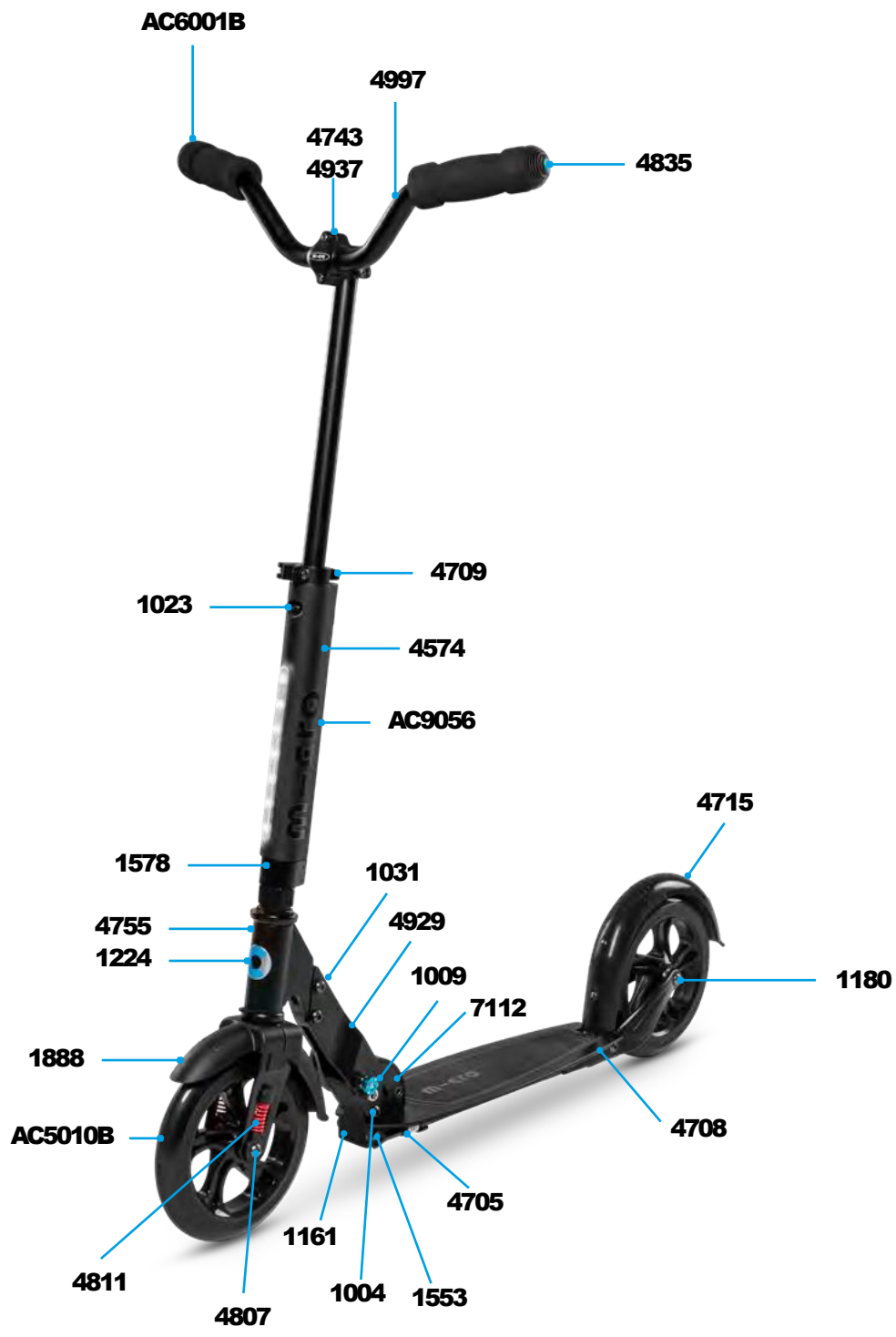

MICRO DOWNTOWN

PARTS

Article No.	Article
6702	Front Fork Complete With Brake And Cable
6703	Front Fender With Screws
6704	Front Holder
6705	Headset Complete
6706	Shank Left And Right
6707	Screws For Shank
6708	Lower Screw For Shank
6709	Lower Clamp
6710	Lower Bar
6711	Plastic Spacer For T-Bar
6712	Upper Clamp
6713	Upper T-Bar
6714	Handles And Bar
6715	Top Clamp Complete
6716	Handle
6718	Folding Cover
6719	Deck With Griptape
6720	Brake Complete
6721	Rear Axle
6722	Front Axle
6723	Wheel With Bearing
6724	Folding Button
6725	Botton And Spring
6726	Screws For Folding Block
6727	Griptape
6729	Brake Pads
6730	Folding Complete

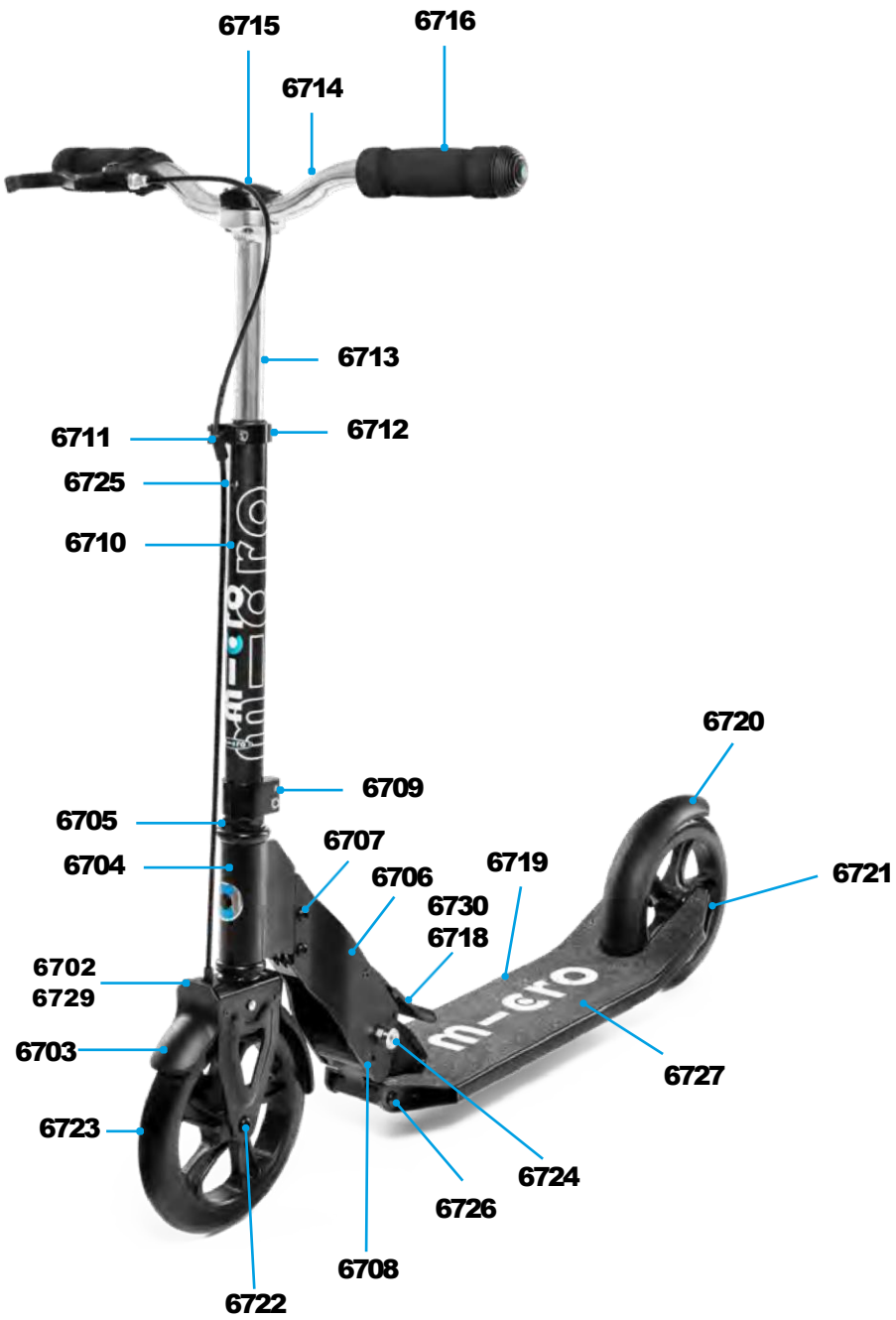

MICRO PEDALFLOW

PARTS

Article No.	Article
1537	Handles
3001	Handle Bar, White
3002	Chain Adjuster
3003	Set Of Bearings For Tube
3004	Front Fork
3005	Air Tube
3006	Front Wheel
3007	Wheeel Bolt
3008	Frame
3009	Chain
3010	Crank Arm Left
3011	Crank Arm Right
3012	Crank Guide
3013	Pedales
3015	Crankset
3016	Chain Adjuster
3017	Back Wheel
3256	Frame, Black

CB0002

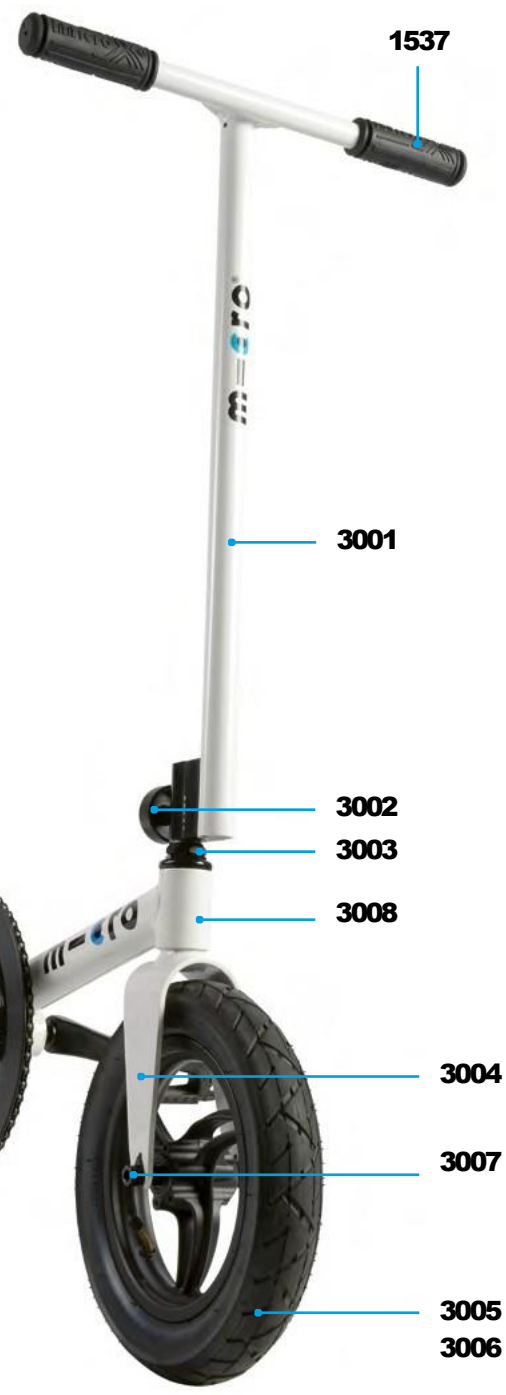

MICRO PEDALFLOW
CB0001

MICRO NAVIGATOR

PARTS

Article No.	Article
6170	Handles
6171	T-Bar Complete
6172	Compass
6173	Push Button Incl. Spring
6174	Active Clamp
6175	Upper Telescope-Bar Spacer
6176	Lower Clamp Complete
6177	Headset Complete
6178	Folding Complete
6179	Folding Handle Release
6180	Front Fender
6181	Front Fork Complete
6182	Front Wheel Axle
6184	Kickstand Complete
6185	Deck Aluminium Frame Incl. Screws
6186	Wheel
6187	Rear Wheel Axle
6188	Rear Brake Complete Incl. Screws
6189	Rear Fender
6190	Reflective Sticker
6191	Rear Fender Screws 8mm
6192	Griptape
AC1007	Single Bearing ABEC 9

SA0232

MICRO SUBURB

PARTS

Article No.	Article
4790	T-Bar Complete
4791	Handgrip With Push Button
4792	Rubber Handgrips
4793	Lower Clamp With Screws
4794	Active Clamp
4795	Push Button And Spring
4796	Headset
4797	Dust Protection
4798	Front Fender
4799	Rear Fender With Brake
4852	Front Wheel Axle
4853	Rear Wheel Axle
4854	Front Fork
4855	Front Fork Cover Incl. Sticker
4856	Sticker
4857	Side Cover For Folding Mechanism
4858	Lever For Folding Mechanism
4859	Wheel
4860	Griptape
4861	Front Cover For Deck
AC1007	Single Bearing ABEC 9

SA0236

ADULTS

KICKBOARD

MICRO KICKBOARD ORIGINAL INTERCHANGEABLE

PARTS

Article No.	Article
1025	Quick-Acting Clamp, Silver
1033	Board Fixation Plates For Deck
1034	Countersunk Screws With Nut For Board Fixing 23mm
6194	Countersunk Screws With Nut For Board Fixing 29mm 2.0
1076	Plastic Linkage Tube
1097	Axle Bolt With Nut, 36 mm
1098	Axle Bolt With Nut, 57 mm
1099	Head Front Complete
1388	Brake Spring 2.0
1128	Axle Bolt Internal Thread, 42 mm
1039	Spacer External Bearings, 3.4 mm
1131	Brake Bolt 2.0
1408	Back Part Complete No Wheel With Brake 2.0
1105	Knob, Black
1106	Bolt Folding Mechanism
1108	Axle Bolt External Thread, Washer And Spring , 25 mm
1112	Axle Bolt With Nut, 34 mm
1113	Shank Left
1114	Shank Right
1115	Axle Bolt With Nut And Washer, 46.5 mm
1116	Steering Parts Complete
1122	Spring, Black (size D17xD1.8x60x10t)
4828	Griptape
1160	Axle
1320	Axle Bolt, 46.5 mm
1424	T-Handlebar, Silver
1515	Handlebar And Knob, Silver
1538	Spacer Between Bearings 10.3 mm
1552	Star Nut Handlebar
1586	Bolt And Spring T-Bar
1600	Cap (Swiss Design Logo)
1741	Brake Plate 2.0
4894	Deck & Griptape 2.0

ACCESSORIES

Article No.	Article
AC9011	Interchangeable
AC5003B	Back Wheel Complete Box
AC5005B	Front Wheel Complete Box
AC6003B	Handle Blister
AC5006B	Wheels Complete Black

Micro Kickboard Original 2.0

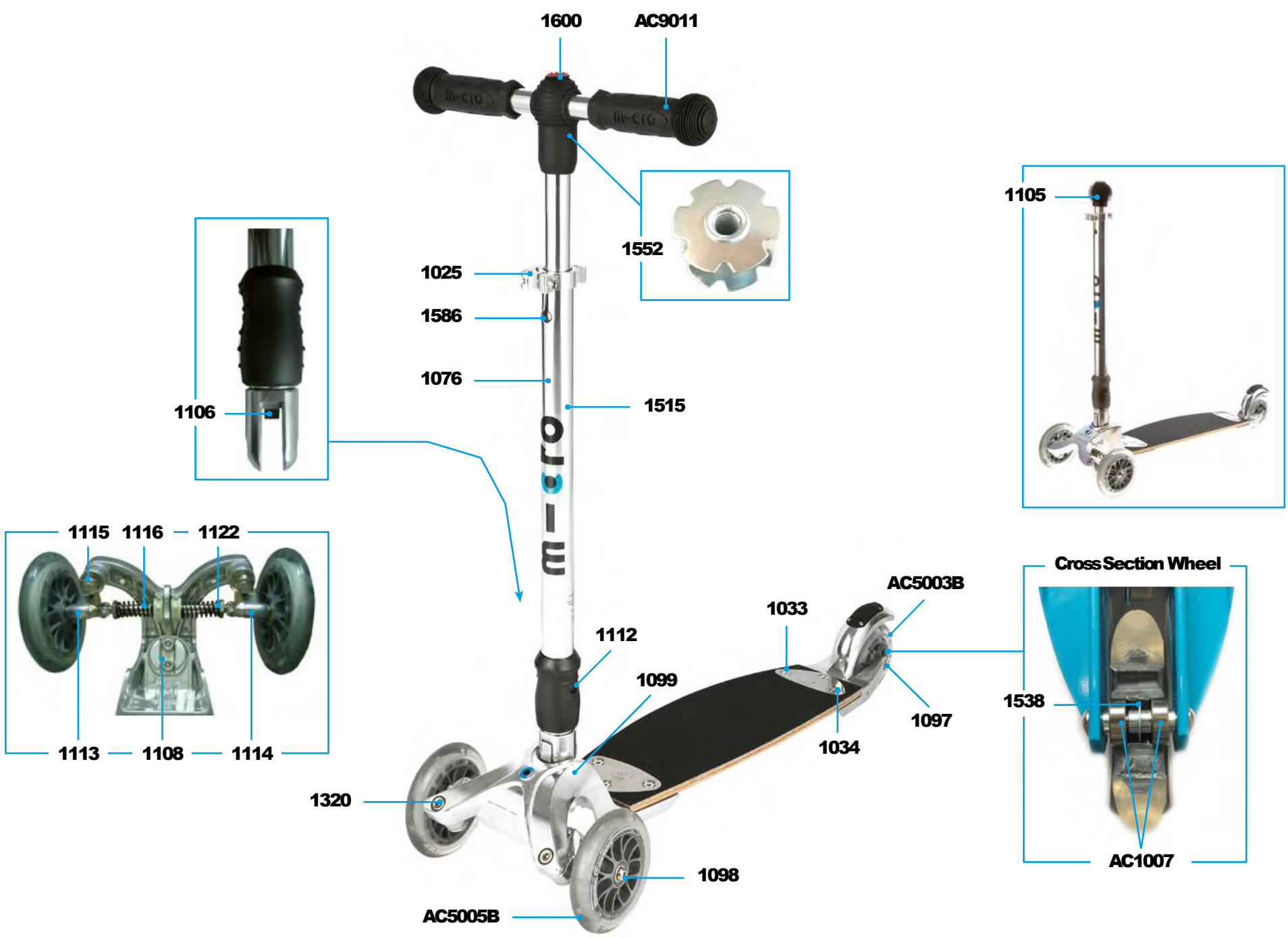

MICRO KICKBOARD COMPACT INTERCHANGEABLE

PARTS

Article No.	Article
1025	Quick-Acting Clamp, Scooter, Silver
1390	Deck And Griptape
1037	Board Fixation Plates Incl. Screws
1076	Plastic Linkage Tube
1105	Knob, Kbo, Black
1108	Axle Bolt Axternal Thread, Washer And Spring , 25 mm
1112	Axle Bolt With Nut, 34 mm
1113	Shank Left, Kbo
1114	Shank Right, Kbo
1115	Axle Bolt With Nut And Washer, 46.5 mm
1116	Steering Parts Complete, Kbo
1128	Axle Bolt Internal Thread, 42 mm
1039	Spacer External Bearings, 3.4 mm
1122	Spring Black (Size D17xD1.8x60x10t)
1130	Front Head Complete
1131	Brake Bolt
1133	Back Part And Brake, Without Wheel
1134	Push Button And Plastic With Cap Handlebar
1135	Guidance Handlebar
1136	Handlebar Complete With Knob, Silver
4851	Griptape New Version
1137	Griptape Old Version
1160	Axle
1320	Axle Bolt, 46.5 mm
1338	T-Handlebar, Silver
1388	Brake Spring
1389	Brake Plate, Silver
1513	Handlebar Complete With Knob, Silver
1538	Spacer Between Bearings 10.3 mm
1552	Star Nut Handlebar
1586	Bolt And Spring T-Bar
1600	Swiss Cap

ACCESSORIES

Article No.	Article
AC9011	Interchangeable
AC5006B	Wheel Complete Blister
AC6003B	Handles Blister
AC7009B	Brake Complete Blister
AC1007	Single Bearing ABEC 9

Micro Kickboard Compact 2.0

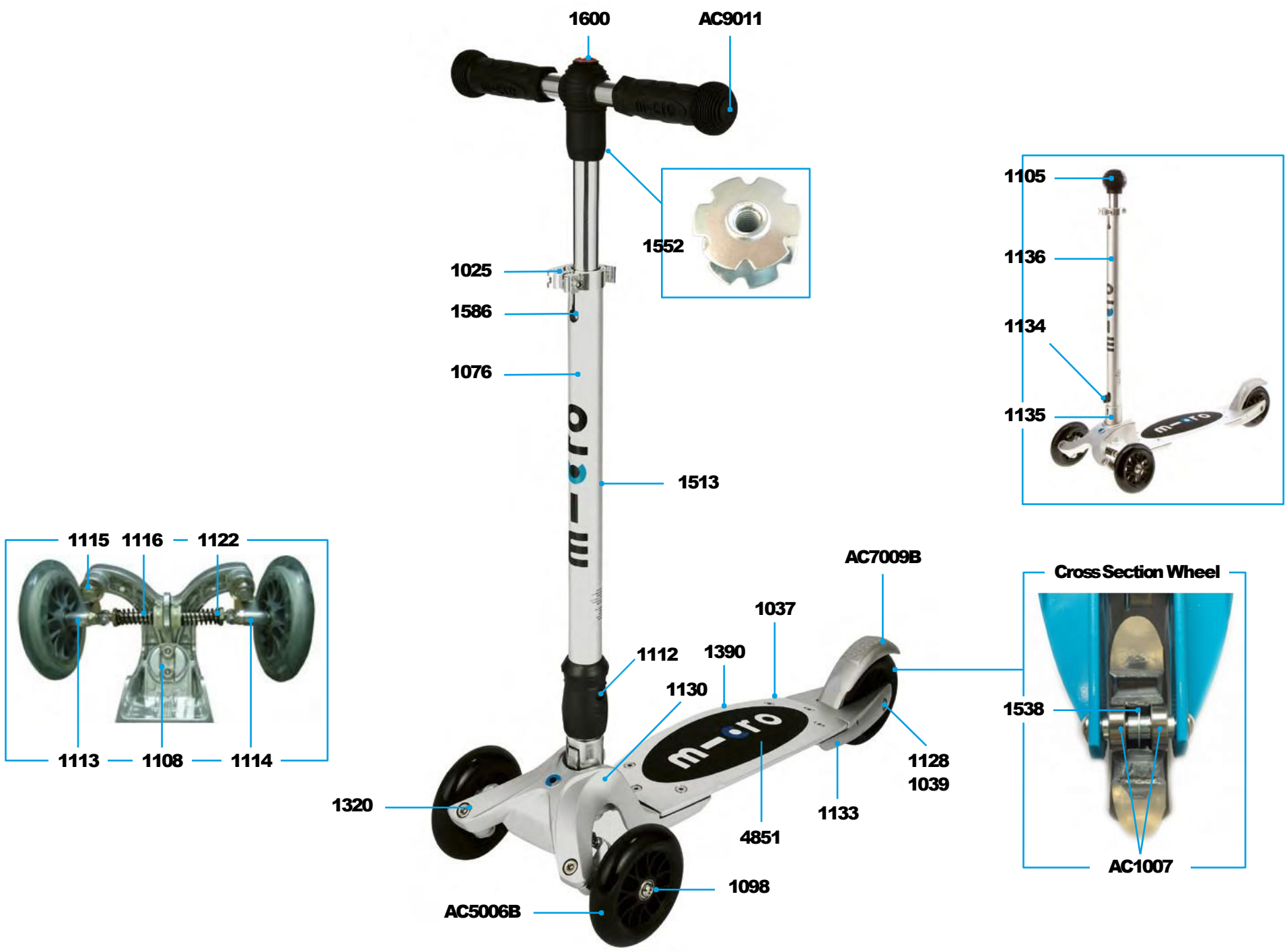

MICRO KICKBOARD COMPACT INTERCHANGEABLE
KB0019

MICRO KICKBOARD COMPACT T-BAR

PARTS

Article No.	Article
1025	Quick-Acting Clamp, Silver
1037	Board Fixation Plates Complete, Alu Deck
1069	Tube For Handle Grip
1076	Plastic Linkage Tube
1108	Axle Bolt External Thread, Washer And Spring , 25 mm
1112	Axle Bolt With Nut, 34 mm
1115	Axle Bolt With Nut And Washer, 46.5 mm
1116	Steering Parts Complete
1122	Spring Black (Size D17xD1.8x60x10t)
1128	Axle Bolt Internal Thread, 42 mm
1129	Spacer External Bearings 3.4 mm
1131	Brake Bolt
1134	Push-Button And Plastic With Cap Handle Bar
4851	Griptape
1320	Axle Bolt, 46.5 mm
1342	T-Bar Complete, Black
1388	Brake Spring
1389	Brake Plate, Silver
1390	Deck And Griptape, Black
1391	Head Front, Black
1393	Back Part Compleet No Wheel With Brake, Black
1394	Guidance Handlebar
1411	Holder For Handgrip
1427	Shank Left, Black
1428	Shank Right, Black
1514	Handlebar Complete With Knob, Black
1538	Spacer Between Bearings 10.3 mm
1552	Star Nut Handlebar
1586	Bolt And Spring T-Bar
1600	Cap (Swiss Design Logo)

ACCESSORIES

Article No.	Article
AC6003B	High Density Rubber Hand Grip
AC9011	Interchangeable
AC5006B	Wheel Complete Blister
AC7024B	Brake Complete Blister
AC1007	Single Bearing ABEC 9

Micro Kickboard Compact 2.0

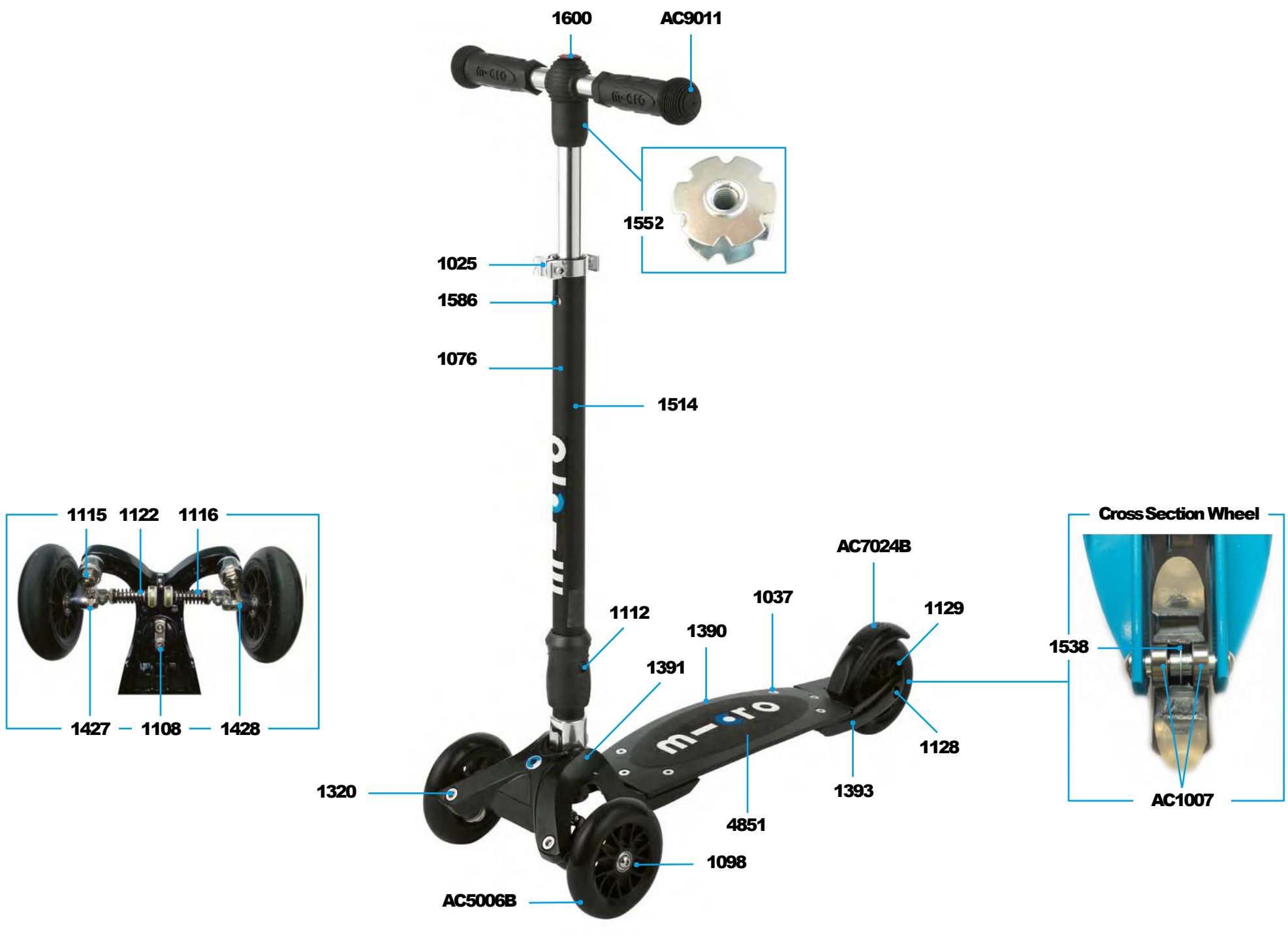

MICRO KICKBOARD MONSTER INTERCHANGEABLE

PARTS

Article No.	Article
1025	Quick-Acting Clamp, Silver
1033	Board Fixation Plates For Deck
1076	Plastic Linkage Tube
1105	Knob, Black
1106	Bolt Folding Mechanism
1108	Axle Bolt External Thread, Washer And Spring , 25 mm
1112	Axle Bolt With nut, 34 mm
1115	Axle Bolt With Nut And Washer, 46.5 mm
1116	Steering Parts Complete
1124	Spring Red (new size D19xD2.2X60X9T)
1165	Axle Bolt With Nut, 108 mm
1166	Spacer External Bearings 32.5 mm
1167	Axle Bolt With Nut, 73 mm
1168	Head Front Complete
1169	Brake Plate
1170	Brake Spring
1171	Brake Bolt
1173	Back Part Complete No Wheel With Brake
1175	Shank Left
1176	Shank Right
1178	Griptape, Black
1320	Axle Bolt, 46.5 mm
1516	Hanldebar And Knob, Black
1539	Spacer Between Bearings 10.25 mm
1552	Star Nut Handlebar
1586	Bolt And Spring T-Bar
1600	Cap (Swiss Design Logo)
1668	Handlebar and knob, Volcano Grey
1670	Brake Plate, Volcano Grey
1674	Deck And Griptape, Volcano Grey
1675	Griptape, Volcano Grey

ACCESSORIES

Article No.	Article
1669	Head Front Complete, Kbm, Volcano Grey
1671	Back Part Complet No Wheel With Brake, Kbm Volcano Grey
1672	Shank Left, Volcano Grey
1673	Shank Right, Volcano Grey
4670	Deck & Griptape, Kbm Monster, Black New Version 2019
4671	Deck & Griptape, Kbm Monster, Volcano Grey New Version 2019

Article No.	Article	Info
AC9011	Interchangeable	
AC6003B	Handles Blister	Pair
AC7011B	Brake Complete Blister	
AC1007	Single Bearing ABEC 9	

KB0023

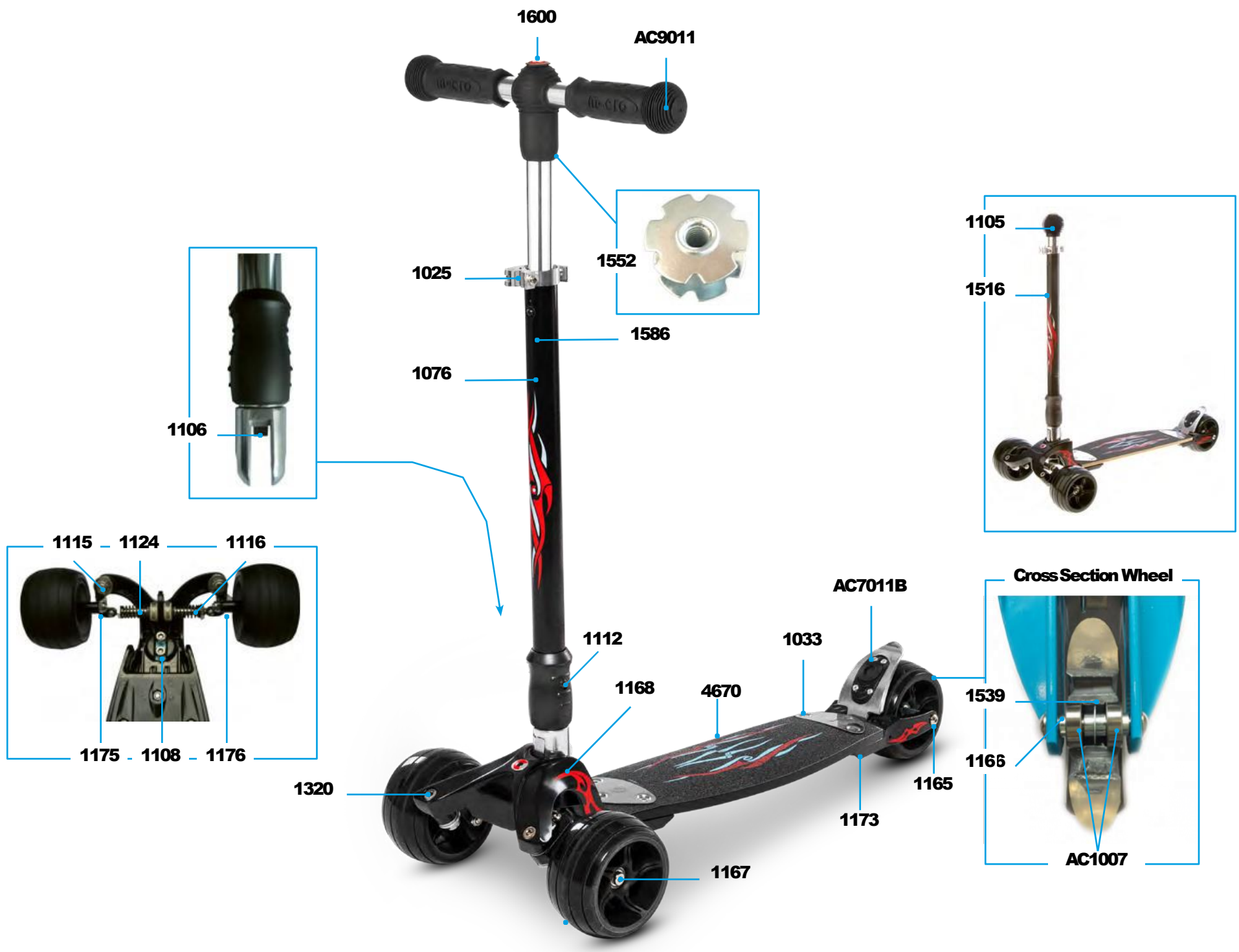

MICRO KICKBOARD MONSTER INTERCHANGEABLE
KB0022

MICRO Kickboard Reloaded

PARTS

Article No.	Article
1538	Space Between bearings
1076	Plastic Linkage Tube
1141	T-Bar Push Button
1586	Bolt And Spring T-Bar
4131	Handgrips
4330	Lower Deck
4331	Deck With Griptape Blue BerryKB0025
4332	Deck With Griptape Plum KB0026
4333	Deck With Griptape Olive KB0027
4335	Steering Shank Left
4336	Steering Shank Right
4337	Steering Spring
4338	Steering Linkage Axle Screw
4339	Steering Parts Complete
4340	T-Bar Light Blue Berry KB0025
4341	T-Bar Navy Plum KB0026
4342	T-Bar Olive KB0027
4343	Griptape
4344	Brake
4345	Electronic For Lower Deck
4346	Rear Wheel Axle
4347	Front Wheel Axle Left
4348	Front Wheel Axle Right
4349	Screws For Deck
4697	Holder For Handlebar With Screws Black
4709	Quick-Acting Plastic Black
4835	Handlebar End Caps
4939	End Lid For Upper Tube 20mm

ACCESSORIES

Article No.	Article
4334	Self-Powered Wheel 120mm
AC1007	Single Bearing ABEC 9
4130B	Handles
4770	Wheel 120mm
4129B	Rubber Handles Complete

KB0025

KB0027

MICRO KICKBOARD RELOADED
KB0026

KIDS

MICRO G-BIKE

PARTS

Article No.	Article
1025	Quick-Acting Clamp, Silver
1030	Bearing Plates
1105	Knob, Black
1152	Holder For Handgrip,
1179	Axle Bolt Internal Thread, 43 mm
1181	Axle Bolt Internal Thread, 47.5 mm
1282	Spacer Between Bearings 24.3 mm
1286	Steering Fork
1287	Brake Handle
1485	Frame, Silver

ACCESSORIES

Article No.	Article
AC6003B	High Density Rubber Hand Grip
AC5010B	Wheel Complete Blister
AC5012B	Air Wheel complete Blister
AC1007	Single Bearing ABEC 9

COLOURS

Article No. And Colour	Rubber Hand Grip
GB0009 Green	1357
GB0010 Orange	1288
GB0011 Pink	1358
GB0012 Purple	1285
GB0013 Yellow	1278
GB0019 Sapphire Blue	1356

MICRO G-BIKE
GB0002 WITH AIR WHEEL

MICRO G-BIKE CHOPPER

COLOURS

Article No. And Colour	Fork	Bar With Handle	Saddle	Frame	Wheel
GB0020	1596	1597	1598		AC5010B
GB0021	1764	1597	1598	1765	AC5014B
GB0022	1767	1597	1598	1768	AC5014B

GB0020

GB0021

GB0022

MICRO G-BIKE CHOPPER DELUXE

COLOURS

Article No. And Colour	Fork	Handlebar With Grips	Saddle	Frame	Wheel 200 mm	Front Axle	Rear Axle
GB0023 Pink	4570	4581	1598	4569	AC5014B	4906	4907
GB0024 Blue	4566	4582	1598	4565	AC5014B	4906	4907
GB0025 Aqua	4572	4583	1598	4571	AC5014B	4906	4907
GB0026 Yellow	4568	4584	1598	4567	AC5014B	4906	4907

GB0023

GB0024

GB0025

GB0026

MICRO BALANCE BIKE

PARTS

Article No.	Article
7007	Plastic Security Cap (Valve)
7028	10 inch Tire
7029	Inner Tube With Cap
7031	Saddle With Tube
7032	Quick Release Clamp On The Saddle Tube
7033	Wheel Nut And Whaser Set (2pcs) Front/Rear Wheel
7034	Handlebar With Grips, Head Set Complete With Screws And Upper Cap
7035	Handlebar Screw
7037	Complete Inverter Logic (Bearings And Nuts)
7038	Red Reflective Sticker Set (2pcs)

ACCESSORIES

Article No.	Article
AC6003B	High Density Rubber Hand Grip

MICRO BALANCE BIKE DELUXE

PARTS

Article No.	Article
7090	Front Fork
7091	Handlebar Spacer
7092	Rear Shock Absorber
7093	Seat
7094	Handlebar With Clamp
7095	Wheel Complete With Axle
7096	Rear Fork
7097	Clamp For Seat
7099	Frame Blue
7100	Frame Red
7115	Rubber Ring For Steering

ACCESSORIES

Article No.	Article
AC6003B	Black Grips Set (2pcs) (From MS)

COLOURS

Article No. And Colour	Frame	Fork
GB0032 Blue	7099	7096
GB0033 Red	7100	7101

MICRO BALANCE BIKE DELUXE PRO

PARTS

Article No.	Article
7002	Inverter Logic (2 Bearings And Washers)
7003	Complete Front Wheel (12inch)
7004	Complete Rear Wheel (12inch)
7005	Tire (Front/Rear)
7006	Tube (Including The Cap)
7007	Security Plastic Cap
7008	Saddle With Tube
7009	Quick Release Clamp (saddle)
7010	Rubber Protection On The Footrest
7011	Suspension (Rubber)
7012	Wheel Washer & Allen Screw Set (2pcs)
7013	Head Set Screws And Washers (4pcs) (From Handlbar) (22,5x5mm)
7014	Handle Bar Without Grips
7015	Locking Screw Foldable Joint (6x3mm)
7016	Micro C Logo Badge
7017	Complete Head Set With Upper Sap/ Screw And 4 Spacers
7018	Head Set Screw On The Steering Tube (25x5mm)

ACCESSORIES

Article No.	Article
AC6003B	Black Grips Set (2pcs) (From MS)

MICRO BALANCE BIKE LITE

PARTS

Article No.	Article
7079	Handlebar
7084	Handgrips
7087	Headset
7077	Seat
7036	Aktiv Clamp For Seat
7039	Wheel With Axle
7019	Wheel Axle

GB0036

GB0035

MICRO BALANCE BIKE DINO

PARTS

Article No.	Article
7116	Handlebar
7117	Handgrips
7118	Headset
7119	Rubber Ring For Steering
7120	Wheel With Axle
7121	Seat
7122	Active Clamp For Seat
7123	Handlebar Protection Cover

GB0038

GB0039

MINI MICRO CLASSIC

PARTS

Article no.	Article
1055	Spacer Between Bearings, 10.25 mm
1068	Rubber handles, Black
1138	Axle Bolt Internal Thread, 42 mm
1139	Brake, Mini, Orange
1140	T-Bar Handles, Black
1141	T-Bar push button
1142	U-Bend
1143	Screw For B-Bend
1144	Shank Left
1145	Shank Right
1146	Stop Washer Left And Right
1147	Steering Link
1148	Deck, Blue
1150	Screw To Deck
1227	B-Bend
1284	Lower Deck, Black
1336	T-Bar short
4657	Axle Bolt External Thread And Nut And Washer, 22 mm
1417	Seat
1418	O-Handle Bar Without Seat
1420	Holder For Seat
1419	Axle Bolt, Seat
1587	Nut For Brake
1588	Screw And Nut For Brake
4660	Front Wheel Axle Right
4662	Front Wheel Axle Left

ACCESSORIES

Article No.	Article
AC6003B	High Density Rubber Hand Grip
AC5005B	Front Wheel Complete Blister
AC7001B	Brake Complete Blister
AC5002B	Back Wheel Complete Blister
AC1007	Single Bearing ABEC 9
AC9000	Handlebar With Saddle Complete
AC9038B	LED Wheel Mini Micro 120mm

AC9000 *SEAT*

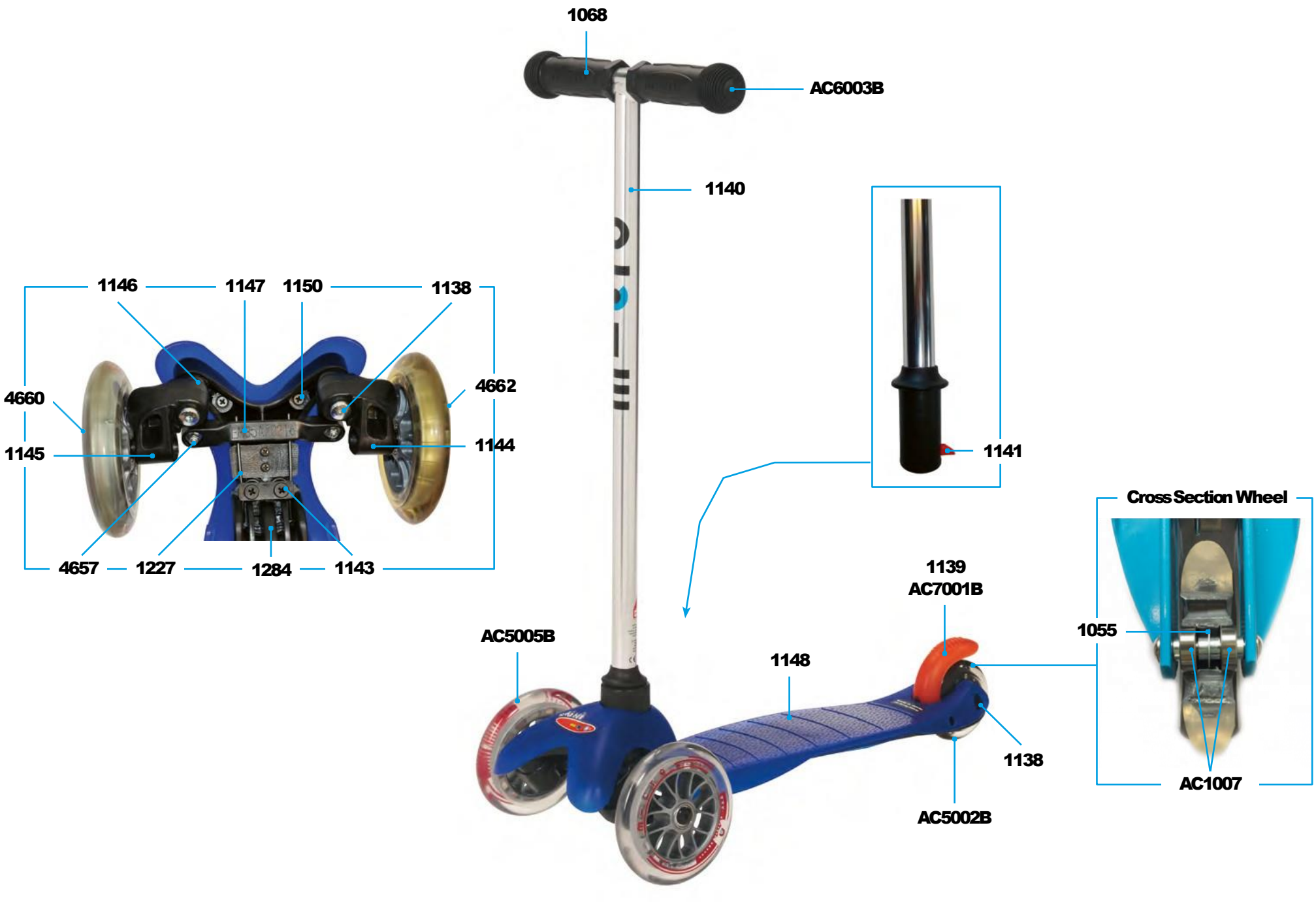

MINI MICRO CLASSIC

COLOURS

Article No. And Colour	Deck	Rubber Grips	T-Bar Complete	Brake
MM0001 Blue	1148	1068	1653	1139
MM0002 Pink	1149	1068	1654	1139
MM0005 Orange	1272	1068	1655	1139
MM0007 Green	1273	1276	1656	1139
MM0008 Red	1274	1277	1659	1139
MM0009 Yellow	1275	1278	1657	1139
MM0022 Aqua	1337	1289	1658	1139
MM0156 Purple	1436	1285	1660	1139
MM0184 Candy Blue	1606	1607	1609	1608
MM0186 Candy Lilac	1614	1615	1617	1616

MM0001

MM0002

MM0005

MM0007

MM0008

MM0009

MM0022

MM0156

MM0184

MM0185

MM0186

MINI MICRO DELUXE | FOLDABLE | ECO | MAGIC | 3IN1 DELUXE

PARTS

Article No.	Article
1055	Spacer Between Bearings 10.25 mm
1138	Rear Wheel Axle
1141	T-Bar Push Button
1144	Shank Left
1143	Screws With Plate For u/b Bend
1145	Shank Right
1146	Stop Washer Left And Right
1147	Steering Link
1150	Screw To Deck
1227	B-Bend
1284	Lower Deck, Black
1336	T-Bar Short
4657	Axle Bolt External Thread And Nut And Washer, 22 mm
1586	Bolt And Spring T-Bar
1587	Nut For Brake
1588	Screw And Nut For Brake
1805	Plastic Linkage Tube
1813	Quick-Acting Plastic, Black
4660	Front Wheel Axle Right
4662	Front Wheel Axle Left
4830	Mini Micro Deluxe Magic Upper T-Bar No Grips Including Spring And Bolt
4901	Mini Magic Electric Set Complete
4902	Mini Magic Lightball
4903	Mini Magic Handles Aqua
4904	Mini Magic Handles Purple
4905	Mini Magic Handles Pink
4940	Mini Magic Handles Black
4941	Mini Magic Handles Navy Blue
4157	Lower Deck For Mini Glow Black
4156	Self-Powered Rear Wheel Set
4158	LED Set For Lower Deck

ACCESSORIES

Article No.	Article
4924	Complete T-Bar Magic Purple
4925	Complete T-Bar Magic Pink
4926	Complete T-Bar Magic Aqua
4927	Complete T-Bar Magic Navy Blue
4162	Griptape Minilino

Article No.	Article
AC6003B	High Density Rubber Hand Grip, Black
AC5005B	Front Wheel Complete Blister
AC7001B	Brake Complete Blister, Orange
AC5002B	Back Wheel Complete Blister
AC1007	Single Bearing ABEC 9
AC9038B	LED Wheel Mini Micro 120mm
AC9108	Magic Mini Upper T-Bar Set With Black Handles
4300B	LED Moon Wheel Pearl
4301B	LED Moon Wheel Crystal

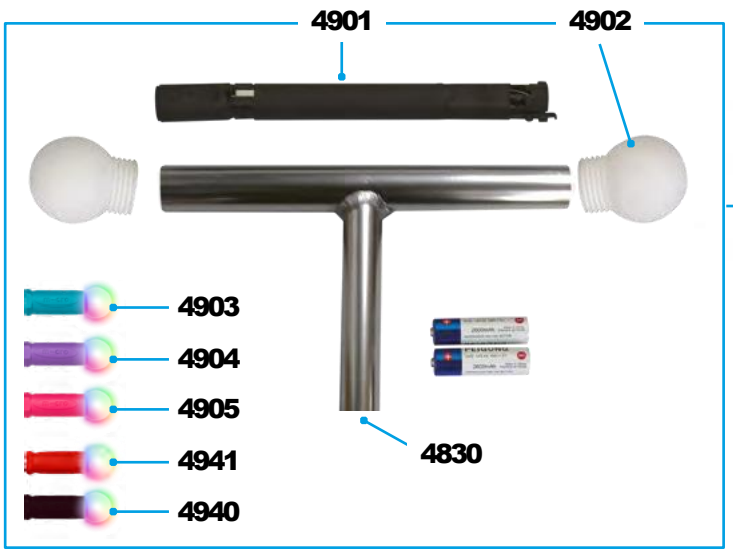

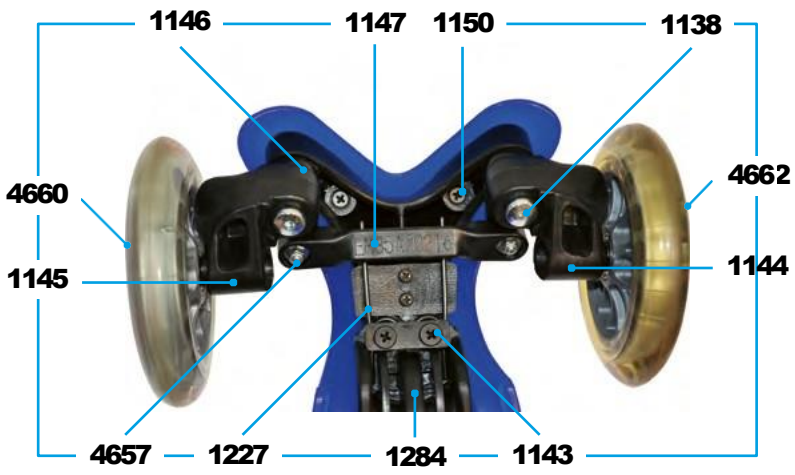

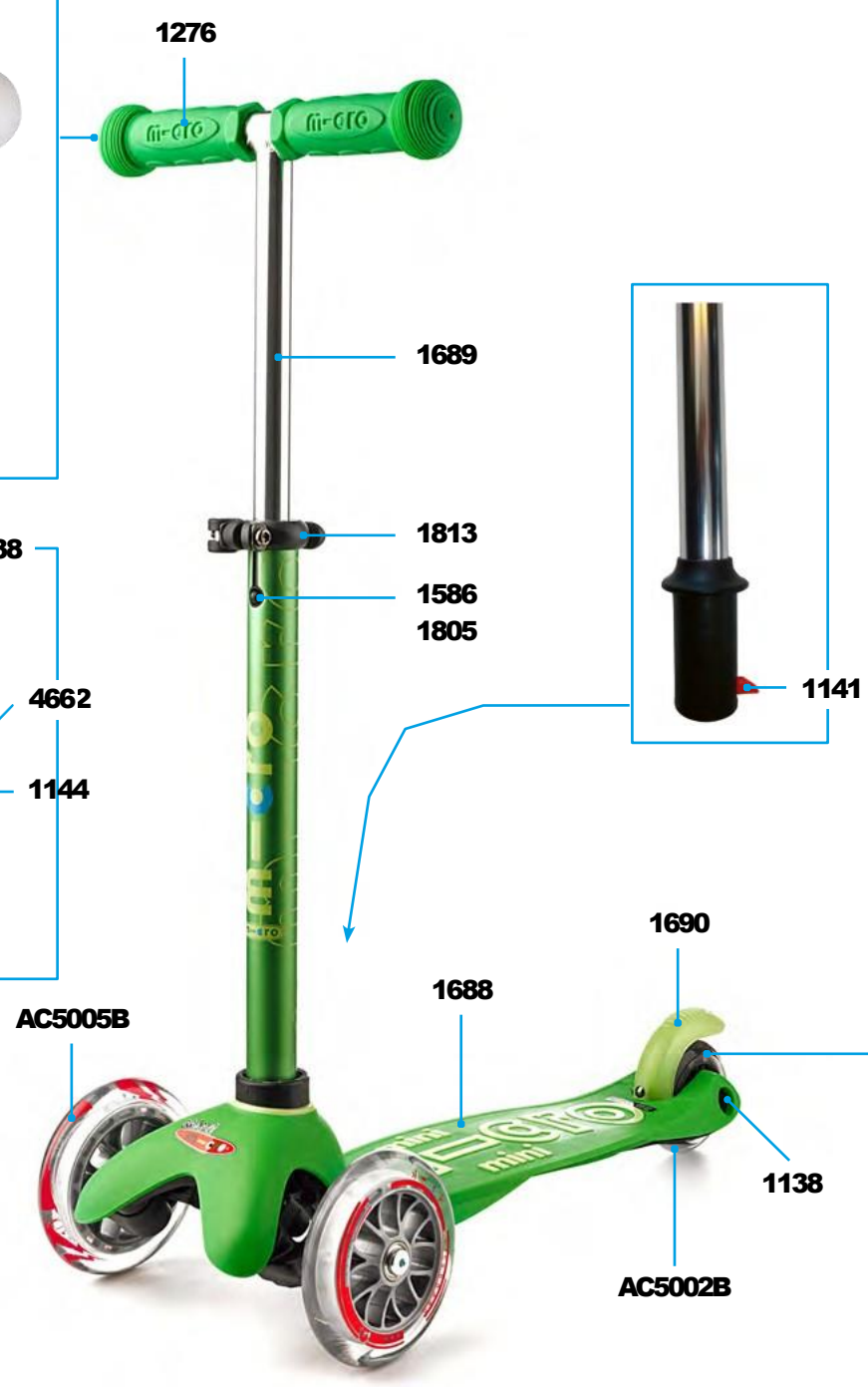

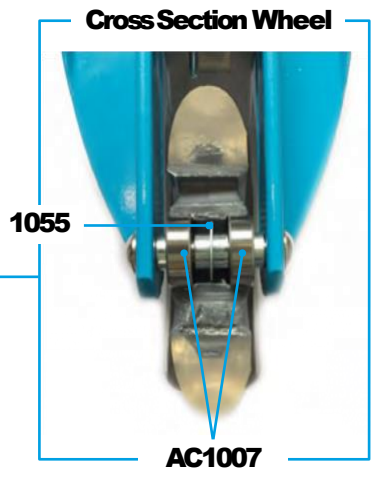

MINI MICRO DELUXE | 3IN1 DELUXE
MMD002

MINI MICRO DELUXE | FOLDABLE | ECO | MAGIC | 3IN1 DELUXE | Flux

COLOURS

Article No. And Colour	Deck	Rubber Grips	T-Bar Complete	Brake
MMD001 Deluxe Aqua	1685	1289	1686	1687
MMD011 3in1 Deluxe Aqua			1686	
MMD076 Deluxe LED Aqua			1686	
MMD155 Deluxe Foldable Aqua			4891	
MMD131 Deluxe Magic Aqua		4903	4926	
MMD198 Deluxe Foldable LED Aqua		1289	4891	
MMD002 Deluxe Green	1688	1276	1689	1690
MMD010 3in1 Deluxe Green				
MMD051 Deluxe LED Green				
MMD003 Deluxe Pink	1691	1415	1692	1693
MMD075 Deluxe LED Pink				
MMD009 3in1 Deluxe Pink				
MMD156 Deluxe Foldable Pink			4889	
MMD197 D. Foldable LED Pink			4889	
MMD130 Deluxe Magic Pink		4905	4925	
MMD004 Deluxe Purple	1694	1285	1695	1696
MMD012 3in1 Deluxe Purple				
MMD129 Deluxe LED Purple				
MMD153 Deluxe Foldable Purple			4893	
MMD199 Deluxe Foldable LED Purple			4893	
MMD129 Deluxe Magic Purple		4904	4924	
MMD005 Deluxe Yellow	1697	1278	1698	1699
MMD013 3in1 Deluxe Yellow				
MMD053 Deluxe LED Yellow				
MMD006 Deluxe Blue	1700	1414	1701	1702
MMD014 3in1 Deluxe Blue				
MMD007 Deluxe Red	1703	1277	1704	1705
MMD015 3in1 Deluxe Red				
MMD195 Minilino LED Red	4161		4159	4160
MMD008 Deluxe Orange	1706	1288	1707	1708
MMD037 Deluxe Lavender	1844	1850	1838	1856
MMD150 Deluxe LED Lavender				
MMD038 Deluxe Apricot	1840	1846	1834	1852
MMD151 Deluxe LED Apricot				
MMD039 Deluxe Black Grey	4607	1068	4606	4608
MMD055 Deluxe Ice Blue	4513	4515	4514	4512
MMD046 Deluxe Ocean Blue	1842	1848	1836	1854
MMD152 Deluxe LED Ocean Blue				
MMD102 Deluxe Foldable Ocean Blue			4897	
MMD200 D. Foldable LED Ocean Blue			4897	
MMD373 D. Foldable LED Orion Pink	4195	4193	4191	4197
MMD374 D. Foldable LED Orion Blue	4196	4194	4192	4198

Article No. And Colour	Deck	Rubber Grip	T-Bar Complete	Brake
MMD054 Deluxe Ruby Red	4517	4519	4518	4516
MMD101 Foldable Ruby Red			4896	
MMD073 Deluxe Navy Blue	4610	4612	4609	4611
MMD118 Deluxe LED Navy Blue				
MMD154 Deluxe Foldable Navy Blue			4892	
MMD149 Deluxe Magic Navy Blue		4941	4927	
MMD196 D. Foldable LED Navy Blue			4892	
MMD074 Deluxe Turquoise	4614	4632	4613	4615
MMD119 Deluxe ECO Green	4824	4823	4827	4822
MMD164 Deluxe ECO LED Green				
MMD161 3in1 Deluxe ECO Green				
MMD167 3in1 Deluxe ECO LED Green				
MMD222 Deluxe Fold. ECO LED Green			4190	
MMD157 Deluxe ECO Black	4840	1068	4863	4507
MMD165 Deluxe ECO LED Black				
MMD162 3in1 Deluxe ECO Black				
MMD168 3in1 Deluxe ECO LED Black				
MMD158 Deluxe ECO Mint	4839	4864	4838	4862
MMD166 Deluxe ECO LED Mint				
MMD163 3in1 Deluxe ECO Mint				
MMD169 3in1 Deluxe ECO LED Mint				
MMD173 Deluxe LED Purple Pink	4875	1285	4883	4881
MMD174 Deluxe LED Green Blue	4876	1276	4884	4688
MMD175 Deluxe LED Crystal Blue	4527	4529	4528	4526
MMD176 Deluxe LED Blue White	4877	1414	4885	1705
MMD201 Deluxe Flux LED Neon Green	4682	1622	4052	4526
MMD202 Deluxe Flux LED Yellow	4683	1846	4053	1854
MMD203 Deluxe Flux LED Neon Pink	4684	1358	4079	4881
MMD204 Deluxe Flux LED Navy	4685	4998	4099	4688
MMD205 Deluxe Flux LED Neon Yellow	4686	1278	4680	1281
MMD206 Deluxe Flux LED Red	4687	1277	4681	1280
MMD207 Deluxe Fairy Glitter LED Purple	4302	4304	4306	4308
MMD207 Deluxe Fairy Glitter LED Pink	4303	4305	4307	4309
MMD216 Deluxe Galaxy Glitter LED Navy	4138	4998	4099	4139
MMD363 Deluxe Flux LED Pink Neochr.	4312	1849	4310	4313
MMD364 Deluxe Flux LED Navy Neochr.	4685	4998	4311	4688
MMD211 Deluxe Glow LED Plus Arctic Bl.	4140	4144	4148	4152
MMD215 Deluxe Glow LED Artic Blue				
MMD212 Deluxe Glow LED Plus Icy Li.	4141	4145	4149	4153
MMD216 Deluxe Glow LED Icy Lime				
MMD213 Deluxe Glow LED Plus Frosty P.	4142	4146	4150	4154
MMD217 Deluxe Glow LED Frosty Pink				
MMD214 Deluxe Glow LED Plus Glacier A	4143	4147	4151	4155
MMD218 Deluxe Glow LED Glacier Aqua				

Green

Aqua

Turquoise

Ocean Blue

Ice Blue

Purple Pink

Blue White

Navy Blue

Blue *OLD 2016*

Blue *NEW 2017*

Purple

Lavender

Green Blue

Ocean Blue

Pink

Red *OLD 2016*

Red *NEW 2017*

Ruby Red

Orange

Crystal Blue

Black

Apricot

Yellow

Black Eco

Mint Eco

Green Eco

Neon Green

Yellow

Neon Pink

Navy

Neon Yellow

Red

Fairy Glitter Purple

Fairy Glitter Pink

Galaxy Glitter Navy

Minilino Red

MICRO 3IN1 ACCESSORIES

PARTS

Article No.	Article
AC8051	Mini Micro 3in1 Deluxe Plus Set
AC9027	3in1 Pushbar With Adapter And Footrest
AC9000	Seat And O-Bar
1724	Plus Push Bar
4633	Screw And Front Holder
4691	Seat With Screw And Front Holder And Plastic Spacer
4802	Footrest
4599	Plastic Spacer
4634	Adapter For Pushbar
4692	Disc And Stopper For Pushbar
1418	O-Handlebar
1417	Seat With Screw And Front Holder
1419	Screw For Front Holder
1420	Front Holder

AC8051

AC9027

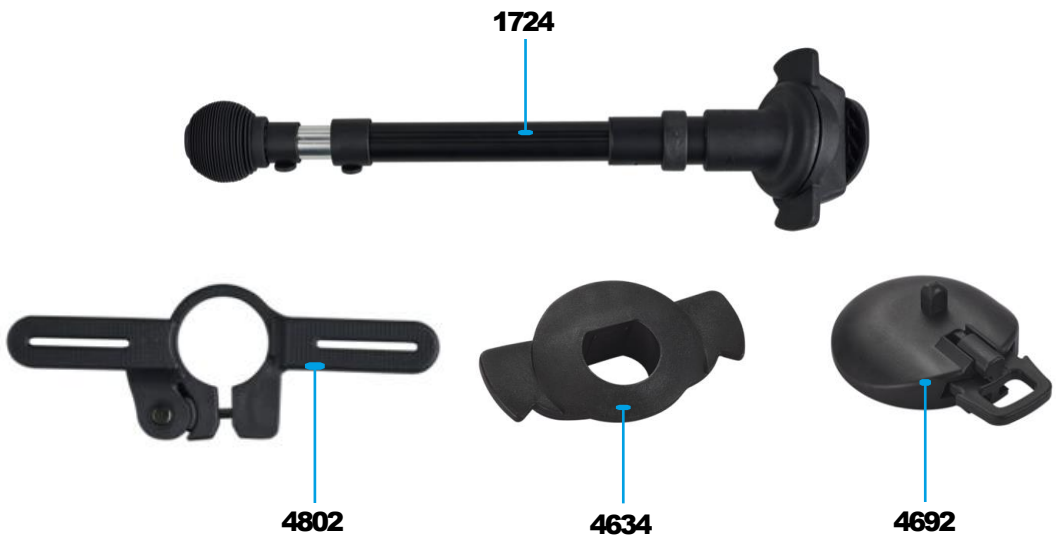

AC9000

MICRO MINI2GO

PARTS

Article No.	Article
1055	Spacer Between Bearings 10.25 mm
1542	Axle Bolt, Seat Mini 2Go, 40 mm
1547	Deck, Blue
1548	Deck, Pink
1549	Brake, Blue Solid (2375C)
1550	Brake, Pink Solid (801C)
1456	Quick-Acting Plastic, Black
1540	Case, Blue
1541	Case, Pink
1543	Seat, Blue
1544	Seat, Pink
1545	Holder For Seat, Blue
1546	Holder For Seat, Pink
1551	Handlebar Complete
1586	Bolt And Spring T-Bar

ACCESSORIES

Article No.	Article
AC6003B	High Density Rubber Hand Grip
AC1007	Single Bearing ABEC 9

MM0208

MICRO MINI2GO DELUXE | DELUXE PLUS

COLOURS

Article No. And Colour	Deck	Brake	Case	Seat	Holder For Seat	Plus Push Bar	Light
MMD017 Mint	1709	1710	1711	1712	1713	1724	1723
MMD018 Red	1714	1705	1716	1717	1718	1724	1725
MMD029 Pink	1719	1720	1541	1544	1546	1724	1726
MMD030 Blue	1721	1722	1540	1543	1545	1724	1727

MMD017

MMD018

MMD029

MMD030

MICRO MINI2GROW

PARTS

Article No.	Article
1055	Spacer Between Bearings 10.25 mm
1138	Rear Wheel Axle
1144	Shank Left
1143	Screws With Plate For u/b Bend
1145	Shank Right
1146	Stop Washer Left And Right
1147	Steering Link
1150	Screw To Deck
1227	B-Bend
1284	Lower Deck, Black
1336	T-Bar Short
4657	Axle Bolt External Thread And Nut And Washer, 22 mm
1586	Bolt And Spring T-Bar
1587	Nut For Brake
1588	Screw And Nut For Brake
1805	Plastic Linkage Tube
1813	Quick-Acting Plastic, Black
4660	Front Wheel Axle Right
4662	Front Wheel Axle Left
4830	Mini Micro Deluxe Magic Upper T-Bar No Grips Including Spring And Bolt
4901	Mini Magic Electric Set Complete
4902	Mini Magic Lightball
4947	T-Bar Short Magic (No Grip No Lightball)
4936	Footrest For Deck
4938	Cap For Seat
4988	Pushbutton Seat
4948	Footrest Seat
4991	T-Bar Push Button

ACCESSORIES

Article No.	Article
4930B	Moonwheel 120mm LED
AC9038B	LED Front Wheel Mini Micro 120mm (2pcs)
AC5002B	Rear Wheel 80mm Clear
AC1007	Single Bearing ABEC 9

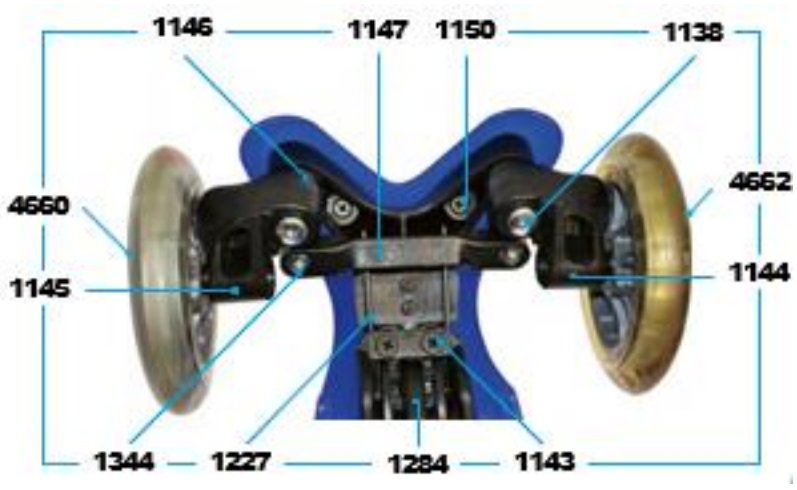

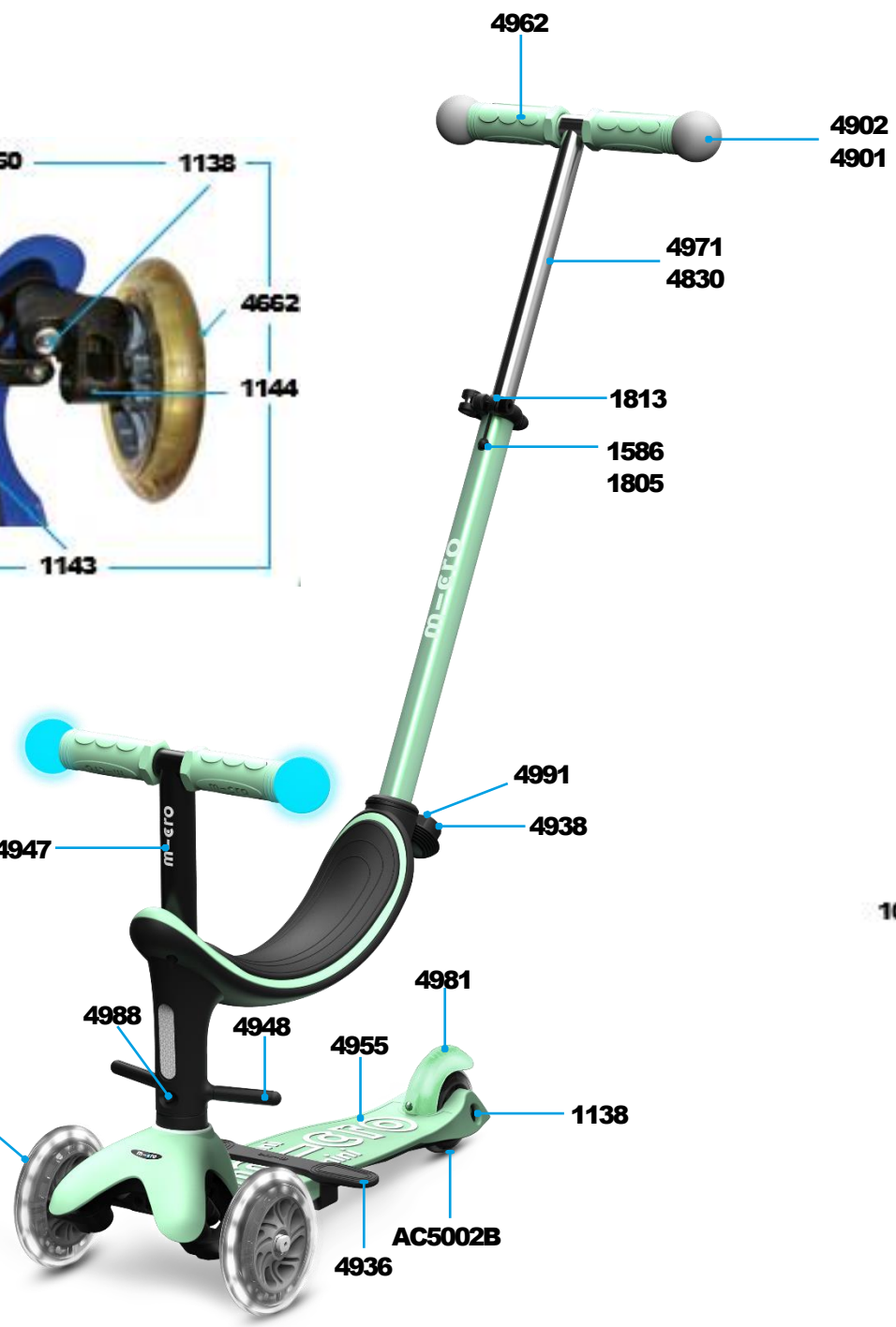

MICRO MINI2GROW

COLOURS

Article No. And Colour	Deck	Rubber Grips	T-Bar Complete	Brake	SEAT
MMD356 Mini2grow Deluxe Magic LED Red	4985	4963	4972	4977	4982
MMD357 Mini2grow Deluxe Magic LED Mint	4955	4962	4971	4976	4981
MMD358 Mini2grow Deluxe Magic LED Blue	4954	4961	4970	4975	4980
MMD359 Mini2grow Deluxe Magic LED Pink	4953	4960	4969	4974	4979
MMD361 Mini2grow Deluxe LED Mint	4955	4959	4125	4976	4981
MMD360 Mini2grow Deluxe LED Blue	4954	4958	4124	4975	4980
MMD262 Mini2grow Deluxe LED Pink	4953	4957	4123	4974	4979

MMD357

MMD358

MMD359

MMD356

MMD361

MMD360

MMD362

MINI MICRO SPORTY (GERMANY)

PARTS

Article No.	Article
1055	Spacer (Inside) Wheel
10893	Screws For Deck 8 Pieces
10929	Screw For B-Bend
11107	Axle
11108	Brake Pin
11109	Brake Spring
11110	Handlebar, Silver | Rubber Grips, Black
11724	Deck, Blue
11776	Clip For T-Bar, Red
12441	Shank Left
12442	Shank Right
12479	Rubber Hand Grip, Black
12780	Axle (Remform Screw With Shaft)
12782	Axle Short
13699	Steering Link
13284	Spring For Clip At T-Bar
13394	Front Wheel
13396	Back Wheel
13494	Body, Black
13549	Brake Orange
13698	U-Bend

ACCESSORIES

Article No.	Article
AC1007	Single Bearing ABEC 9

COLOURS

Article No. And Colour	Deck	T-Bar Complete	Brake	Wheel (Front)	Grip Left	Grip Right
MM0054 Sporty Neon Blue/Pink	11152	11689	13550	13394	1289	1358
MM0055 Sporty Neon Orange/Pink	10922	11687	13550	13394	1358	1288
MM0079 Sporty Blue	11724	11110	13549	13394	1068	1068
MM0080 Sporty Pink	11725	11110	13549	13394	1068	1068
MM0109 Sporty Orange	10922	11110	13549	13394	1068	1068
MM0110 Sporty Green	10923	12356	13549	13394	1276	1276
MM0111 Sporty Red	10924	12357	13549	13394	1277	1277
MM0112 Sporty Yellow	10925	12354	13549	13394	1278	1278
MM0113 Sporty Aqua	10926	12355	13549	13394	1289	1289
MM0134 Sporty Candy Blue	12663	12673	13555	13394	1414	1414
MM0135 Sporty Candy Pink	12664	12672	13554	13394	1358	1358
MM0136 Sporty Candy lilac	12665	12674	13556	13394	1285	1285
MM0222 Sporty Lollipop Red	10924	13381	13552	13387	1278	1278
MM0223 Sporty Lollipop Green	10923	13380	13551	13393	1277	1277
MM0224 Sporty Lollipop Yellow	11678	13382	13553	13386	1276	1276

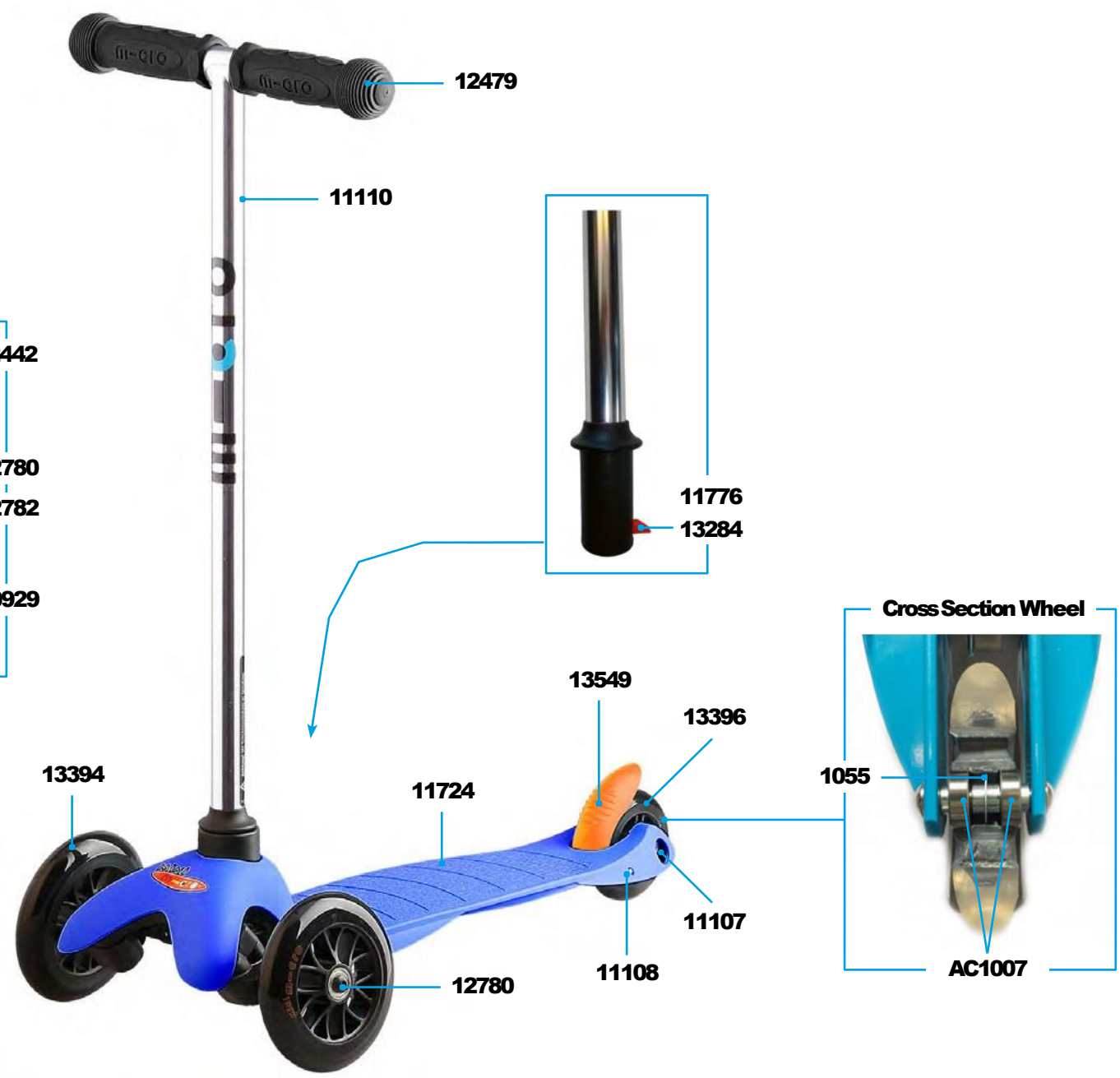

MINI MICRO SPORTY (GERMANY)
MM0079

MICRO PICCOLINO

PARTS

Article No.	Article
10893	Counter-Sunk Screw For Plastic
12210	Main Part Pink, Incl. Print
12211	Handle Bar With Clip
12212	Cover Pink At Bottom Site
12441	Axle Short, Right, For Screw
12442	Axle Short, Left, For Screw
12566	Break Axle
12567	Axle For Backwheel
12597	Cover Handle Bar, Pink
12780	Screw
12781	U-Bend
12782	Screw
12785	Main Part Blue, incl. Print
12786	Cover Handle Bar, Blue
12787	Cover At Bottom Site, Blue
12788	Brake, Pink
12789	Brake Blue
12800	Brake Spring Short
12862	Clip-Locking Handle Bar
12969	Spring For Clip
13018	Wheel PATH Back
13020	Wheel PATH Front
13023	Steering Link

ACCESSORIES

Article No.	Article
AC1007	Single Bearing ABEC 9

MO0003

MICRO PICCOLINO
MO0004

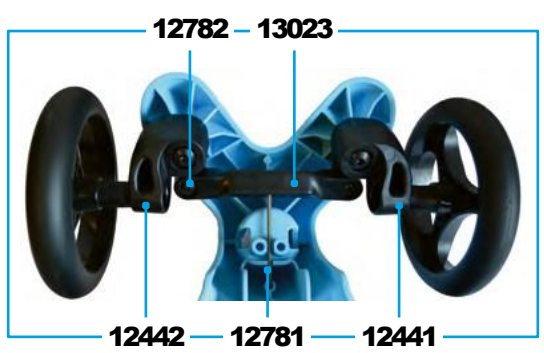

MAXI MICRO CLASSIC | FOLDABLE

PARTS

Article No.	Article
1055	Spacer Between Bearings 10.25 mm
1068	Handles, Rubber, Black
1141	T-Bar Push Button
1143	Screws With Plate For u/b Bend
1236	Shank Left
1237	Shank Right
1147	Steering Link
1241	Screw To Deck
1227	B-Bend
1228	Axle Bolt Internal Thread, 44,5 mm
1229	Axle Bolt Internal Thread, 65 mm
1230	Brake Complete, Silver
1231	Knob, Black
1232	Knob, Purple
1233	Joystick Bar, Black
1234	Joystick Bar, Purple
1238	Deck, Black
1240	Fender, Red
1269	T-Bar, Black | Handles, Black
4657	Axle Bolt External Thread And Nut And Washer, 22 mm
1456	Quick-Acting Plastic, Black
1586	Bolt And Spring T-Bar
1587	Nut For Brake
1588	Screw And Nut For Brake
1618	Plastic Linkage Tube
1808	Rivet For Foldable
1811	Lower T-Tube Complete
1812	Lower T-Tube Complete
4663	Axle Bolt Internal Thread, Left, 44.5mm
4695	Axle Bolt Internal Thread, Right, 44.5 mm

ACCESSORIES

Article No.	Article
AC6003B	High Density Rubber Hand Grip, Black
AC7002B	Brake Complete Blister
AC5006B	Front Wheel Complete Blister
AC5002B	Back Wheel Complete Blister
AC1007	Single Bearing ABEC 9
AC9039B	LED Wheel Maxi Micro 120mm

MM0213

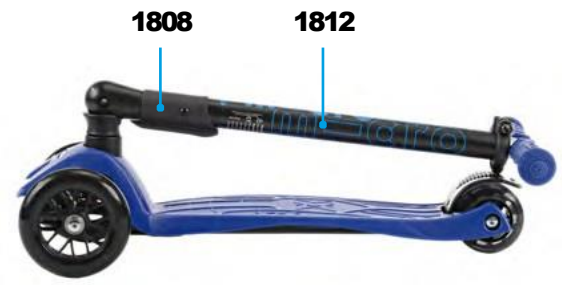

MM0212

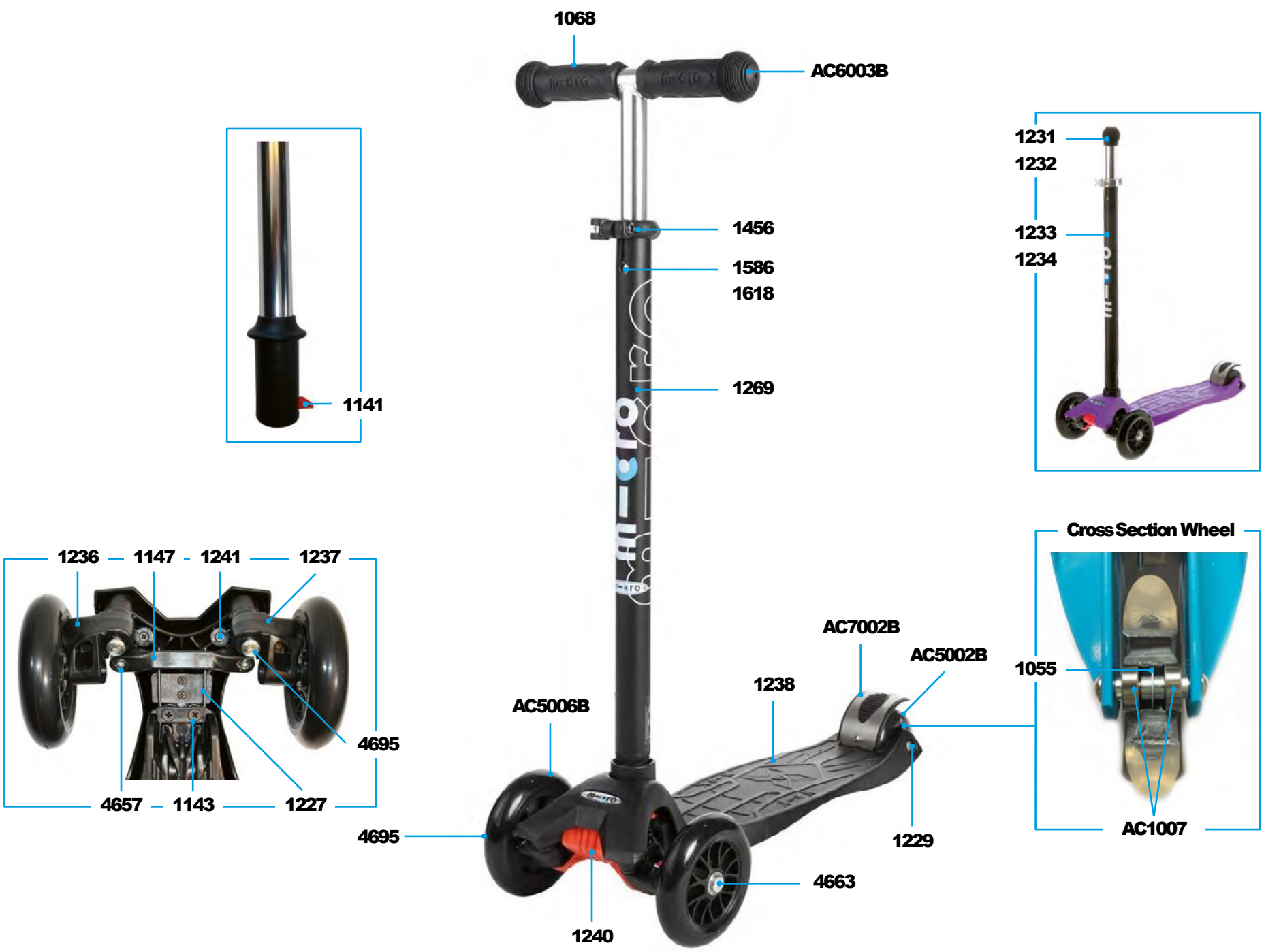

MAXI MICRO CLASSIC
MM0015

MAXI MICRO CLASSIC

COLOURS

Article No. And Colour	Deck	Rubber Grips	Lower T-Tube Complete	Lower Tube Complete (Joystick)	Rivet For Foldable
MM0138 Coral	1437	1454	1438		
MM0028 Orange	1350	1288	1351	1591	
MM0137 Camo Green	1439	1455	1440		
MM0037 Red	1349	1277	1353	1593	
MM0167 Bronze	1441	1445	1442		
MM0019 Purple	1239	1285	1268		
MM0013 White	1347	1068	1269		
MM0035 Blue	1348	1356	1352	1592	
MM0053 Shocking Pink	1345	1358	1355	1595	
MM0049 Lemon Green	1346	1357	1354	1594	
MM0168 Silver	1443	1446	1444		
MM0175 Raspberry	1447	1449	1448		
MM0174 Metallic Purple	1239	1285	1451		
MM0177 Metallic Coral	1437	1454	1479		
MM0225 Metallic Red	1349				
MM0212 Foldable Pink		1415	1811		1808
MM0213 Foldable Blue		1356	1812		1808

MM0169

MM0028

MM0037

MM0225

MM0175

MM0138 | MM0177

MM0053

MM0019

MM0035

MM0049

MM0137 | MM0176

MM0167

MM0168

MM0015

MM0013

MAXI MICRO DELUXE | DELUXE FOLDABLE | LED

PARTS

Article No.	Article
1055	Spacer Between Bearings 10.25 mm
1141	T-Bar Push Button
1143	Screws With Plate For U/B Bend
1146	Stop Washer Left And Right
1147	Steering Link
1227	B-Bend
1228	Axle Bolt Internal Thread, 44.5mm
1229	Axle Bolt Internal Thread, 65 mm
1236	Shank Left
1237	Shank Right
1241	Screw To Deck
4657	Axle Bolt External Thread And Nut And Washer, 22 mm
1456	Quick-Acting Plastic, Black
1498	Fender, Black
1554	Lower Deck
4202	Lower Deck Maxi Glow Plus
4201	Electronic For Lower Deck Glow Plus
4203	Self-Powered Rear Wheel Set
1586	Bolt And Spring T-Bar
1587	Nut For Brake
1588	Screw And Nut For Brake
1618	Plastic Linkage Tube
1808	Rivet, Foldable
1843	Deck, Shocking Pink
1837	T-Bar Complete, Shocking Pink
1849	Rubber Handles, Shocking Pink
1855	Brake Complete, Shocking Pink
4579	Upper Bolt For Foldinginsertion For Maxi Foldable
4695	Axle Bolt Internal Thread, Right, 44.5 mm
4663	Axle Bolt Internal Thread, Left, 44.5mm

ACCESSORIES

Article No.	Article
AC6003B	High Density Rubber Hand Grip, Black
AC5006B	Front Wheel Complete Blister
AC5002B	Back Wheel Complete Blister
AC1007	Single Bearing ABEC 9
AC9039B	LED Wheel Maxi Micro 120mm

MMD028

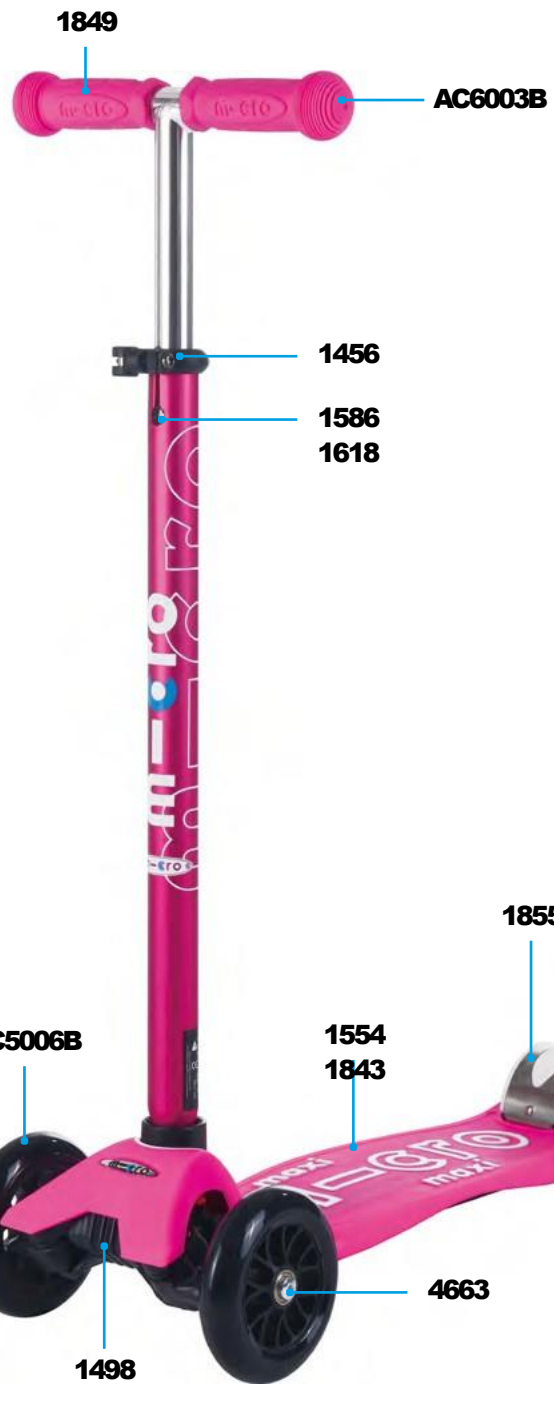

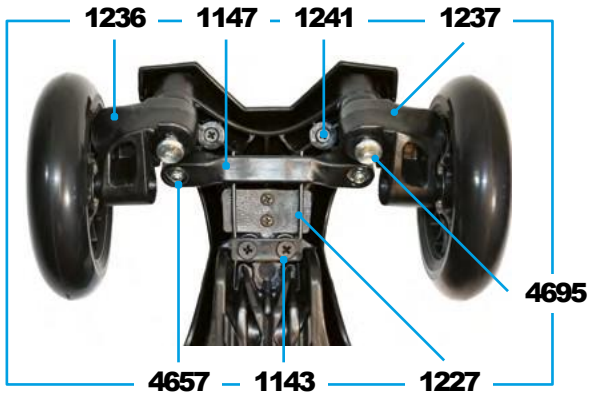

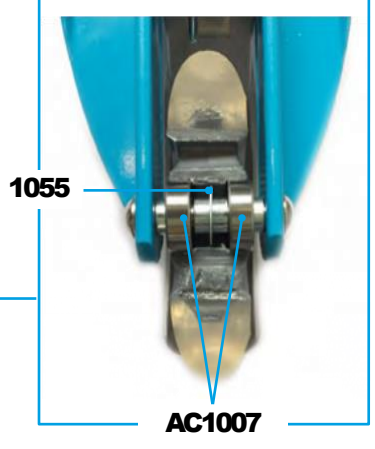

MAXI MICRO DELUXE | DELUXE FOLDABLE | LED

COLOURS

Article No. And Colour	Deck	Rubber Grips	T-Bar Complete	Brake
MMD019 Aqua MMD078 Aqua LED	1728	1731	1729	1730
MMD020 Black / Orange MMD143 Black / Orange LED	1732	1068	1733	1734
MMD021 Pink MMD077 LED Pink	1735	1358	1736	1737
MMD022 Green	1738	1622	1739	1740
MMD023 Blue MMD067 LED Blue	1742	1356	1743	1744
MMD024 Yellow	1746	1749	1747	1748
MMD025 Purple MMD084 Foldable Purple MMD066 LED Purple MMD100 LED Foldable Purple	1750	1285	1751 4713	1752
MMD026 Red MMD068 LED Red MMD098 Foldable LED Red	1753	1277	1754 4711	1870
MMD036 Caribbean Blue MMD085 LED Caribbean Blue	1839	1845	1833	1851
MMD045 Petrol Green MMD065 Foldable Petrol Green MMD097 Foldable LED Petrol Green	1841	1847	1835 4542	1853
MMD035 Shocking Pink MMD096 Foldable LED Shocking Pink	1843	1849	1837	1855
MMD060 Volcano Grey MMD062 Foldable Volcano Grey MMD094 Foldable LED Volcano Grey	4532	4535	4533 4534	4531
MMD061 Berry Red MMD063 Foldable Berry Red MMD095 Foldable LED Berry Red	4537	4540	4538 4539	4536
MMD069 Black / Grey	4617	1068	4616	4618
MMD070 Mint MMD144 LED Mint	4623	4635	4622	4624
MMD071 Indigo	4620	1356	4619	4621
MMD072 Navy Blue MMD082 Foldable Navy Blue MMD083 LED Navy Blue MMD099 Foldable LED Navy Blue	4626	1356	4625 4712	4627

Article No. And Colour	Deck	Rubber Grips	T-Bar Complete	Brake
MMD027 Foldable Bright Blue	1757	1756	1758	1759
MMD028 Foldable Bright Coral MMD093 Foldable LED Bright Coral	1761	1760	1762	1763
MMD122 ECO Green MMD170 ECO LED Green	4825	4823	4826	4821
MMD159 ECO Black MMD171 ECO LED Black	4866	1068	4868	4618
MMD160 ECO Mint MMD172 ECO LED Mint	4865	4864	4867	4869
MMD132 LED Blue White	4870	1414	4872	1870
MMD134 Lavender	4871	1850	4873	4874
MMD133 Foldable LED Navy Red	4878	4612	4879	4880
MMD209 Flux LED Neochrome Black	4318	1068	4327	1230
MMD121 Flux LED Purple	4314	1285	4323	4319
MMD137 Flux LED Blue	4315	1356	4324	4320
MMD138 Flux LED Aqua	4316	1731	4325	4321
MMD139 Flux LED Pink	4317	1449	4326	4322
MMD365 Glow LED Jelly Green MMD376 Glow LED Plus Jelly Green	4169	4173	4165	4177
MMD366 Glow LED Crystal Blue MMD377 Glow LED Crystal Blue	4170	4174	4166	4178
MMD367 Glow LED Luminous Purple MMD378 Glow LED Plus Luminous P.	4171	4175	4167	4536
MMD368 Glow LED Aura Red MMD379 Glow LED Plus Aura Red	4172	4176	4168	4178
MMD233 Neon LED Ultra Pink MMD228 Fold. Neon LED Ultra Pink	4217	4226	4229 4220	4223
MMD232 Neon LED Parrot Green MMD229 Fold Neon LED Parrot Green	4218	4227	4230 4221	4224
MMD231 Neon LED Blaze Orange MMD227 Fold Neon LED Blaze Orang	4216	4225	4228 4219	4222

Yellow

OLD 2016 /MMD026/

Red

Berry Red

Shocking Pink

Pink

Purple

Blue

Indigo

Navy Blue

Caribbean Blue

Aqua

Petrol Green

Mint

Green

Volcano Grey

Black

Grey/Black

Brigt Coral

Bright Blue

Eco Green

Eco Black

Eco Mint

Lavender

Blue White

Navy Red

Neochrome Black

Purple

Blue

Aqua

Pink

Aura Red

Crystal Blue

Jelly Green

Luminous Purple

MAXI MICRO DELUXE PRO | LED

PARTS

Article No.	Article
1143	Screws With Plate For U/B Bend
1456	Quick-Acting Plastic, Maxi, Black
1498	Fender Black
1586	Bolt & Spring T-Bar, Maxi
1618	Plastic Linkage Tube, Maxi
4663	Front Wheel Axle Maxi Deluxe Left
4695	Front Wheel Axle Maxi Deluxe Right
4769	Lower Deck Maxi Micro Deluxe Pro
4770	Front Wheel with Bearing Maxi Micro Deluxe Pro
4771	Rear Wheel With Bearing Maxi Micro Deluxe Pro
4772	Steering Shank L&R Maxi Micro Deluxe Pro
4773	Spring For Maxi Micro Deluxe Pro
4937	End Cap Upper Tube

ACCESSORIES

Article No.	Article
AC6003B	Black Grips Set (2pcs) (From MS)
4054B	LED Wheel

COLOURS

Article No. And Colour	T-Bar Complete	Brake	Grips	Deck	Holder For Handlebar
MMD087 Black/Red	4764	1744	1068	4784	4697
MMD088 Grey/Aqua	4765	4775	1847	4787	4697
MMD089 Grey/Green	4766	4776	1622	4785	4829
MMD090 Deluxe Rose	4767	4777	4782	4788	4829
MMD091 Purple	4768	4778	4780	4786	4697
MMD041 LED Sunburst Yellow	4886	4618	1846	4888	4697
MMD042 LED Vibrant Blue	4887	4775	1847	4993	4829
MMD040 LED Navy Red	4994	4880	4612	4878	4697
MMD043 LED Purple Pink	4995	1752	1285	1750	4829
MMD044 LED Pink	4996	1737	1358	1735	4829
MMD135 LED Rose	4767	4777	4782	4788	4829
MMD136 LED Black Red	4764	1744	1064	4784	4697

MICRO CRUISER | LED

PARTS

Article No.	Article
6020	Upper Clamp Silver
6074	Upper Clamp Black
6021	Plastic Intert
6022	Top Clamp
6023	Handlebar With Grips
6024	Upper Bar With Sping And Bolt
6025	Bolt And Spring
6026	Lower Tube, Blue
6027	Lower Clamp Silver
6075	Lower Clamp Black
6028	Headset With Bearing Complete
6029	Front Head, Blue
6030	Fork
6031	Front Axle
6032	Locking Complete Silver
6076	Locking Complete Black
6033	Push Button, Silver
6034	Front Holder Screw Left And Right
6035	Folding Block
6036	Shank Left And Right, Blue
6037	Screw Block
6038	Kickstand Complete Silver
6077	Kickstand Complete Black
6039	Deck With Griptape, Blue
6040	Axle With Spring For Brake
6041	Brake Complete
6042	Spacer For Wheel
6043	Griptape
6078	Griptape Frosty Blue
6079	Griptape Berry Red
6044	Wheel With Bearing And Spacer
6045	Fender
6054	Rear Axle
6067	Screws Left And Right Side Block
6068	Lower Screws For Shank
6072	Rubber Between Brake And Deck
6051B	LED Wheel Black
6080	LED Wheel Frosty Blue
6081	LED Wheel Berry Red

COLOURS

Article No. And Colour	Lower Tube	Holder Plates	Front Holder	Deck With Griptape
SA0170 Pink	6046	6048	6047	6049
SA0169 Red	6050	6052	6051	6053
SA0203 Aqua	6055	6057	6056	6058
SA0202 / SA0251 Purple	6059	6061	6060	6062
SA0201 Black	6063	6065	6064	6066

SA0170 / SA0198

SA0169

SA0203 / SA0199

SA0202 / SA0251

SA0201

SA0240

SA0257

SA0256

AIR HOPPER *HP0002/HP0003*

PARTS

Article No.	Article
6900	Hopper Seat Blue
6901	Base Blue for Hopper
6902	Hopper Wheel Black
6903	Hopper Airpump
6904	Hopper Seat Pink
6905	Base Pink for Hopper
43-6906	Locking Pins Set Of 4

HP0003

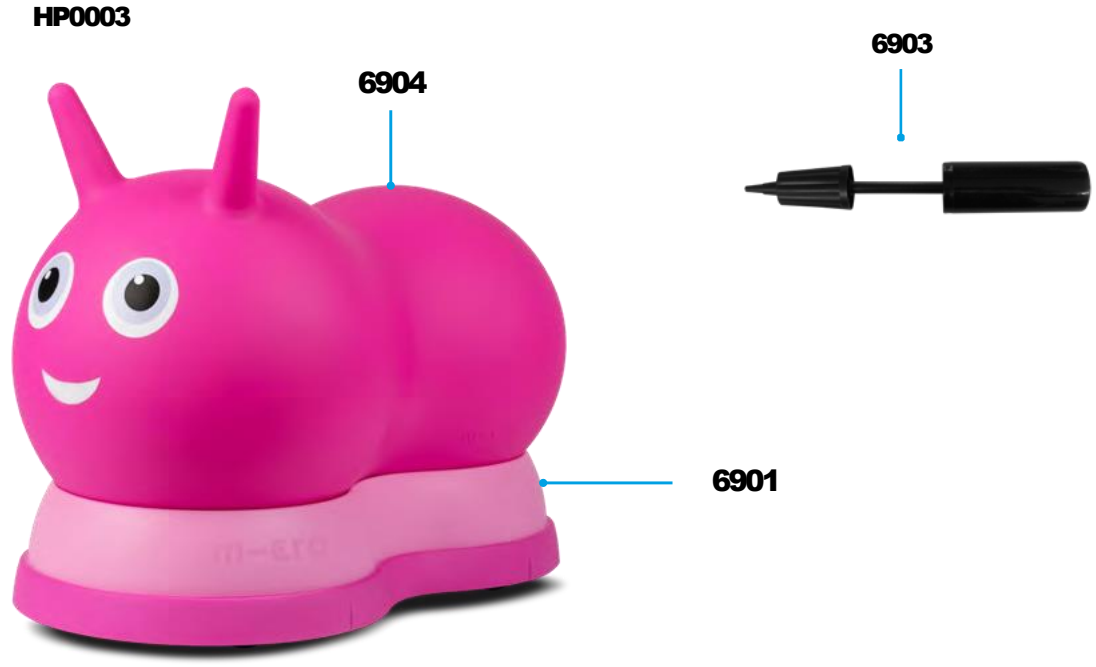

AIR HOPPER II

PARTS

Article No.	Article
6906	Hopper Seat Blue
6907	Hopper Seat Moka
6908	Hopper Seat Pink
6909	Hopper Seat Aqua
6910	Hopper Base Gray
6902	Wheel Complete
6903	Air Pump
6911	Locking Velcro Straps

HP0004

HP0005

HP0006

6903

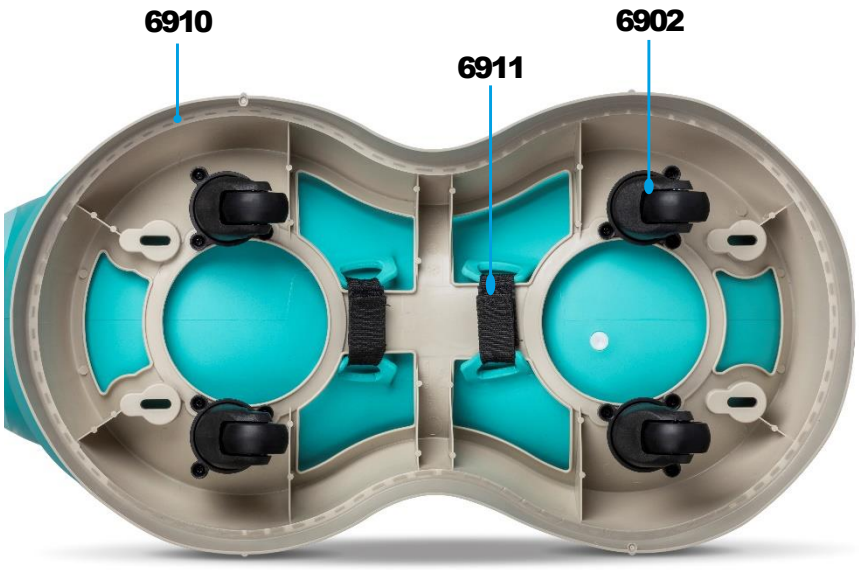

AIR HOPPER II

HP0007

Mini Microlino

PARTS

Article No.	Article
6930	Wheel
6931	Front Wheel Axle set
6932	Rear Wheel Axle set
6937	Handgrips Mint
6938	Handgrips Blue
6939	Handgrips Pink
6933	Handlebar With Clamp
6934	Battery Cover With Screws
6935	Rear Reflektiv Sticker
6936	Seat Padding

MC0003

MC0001

Mini Microlino

MC0002

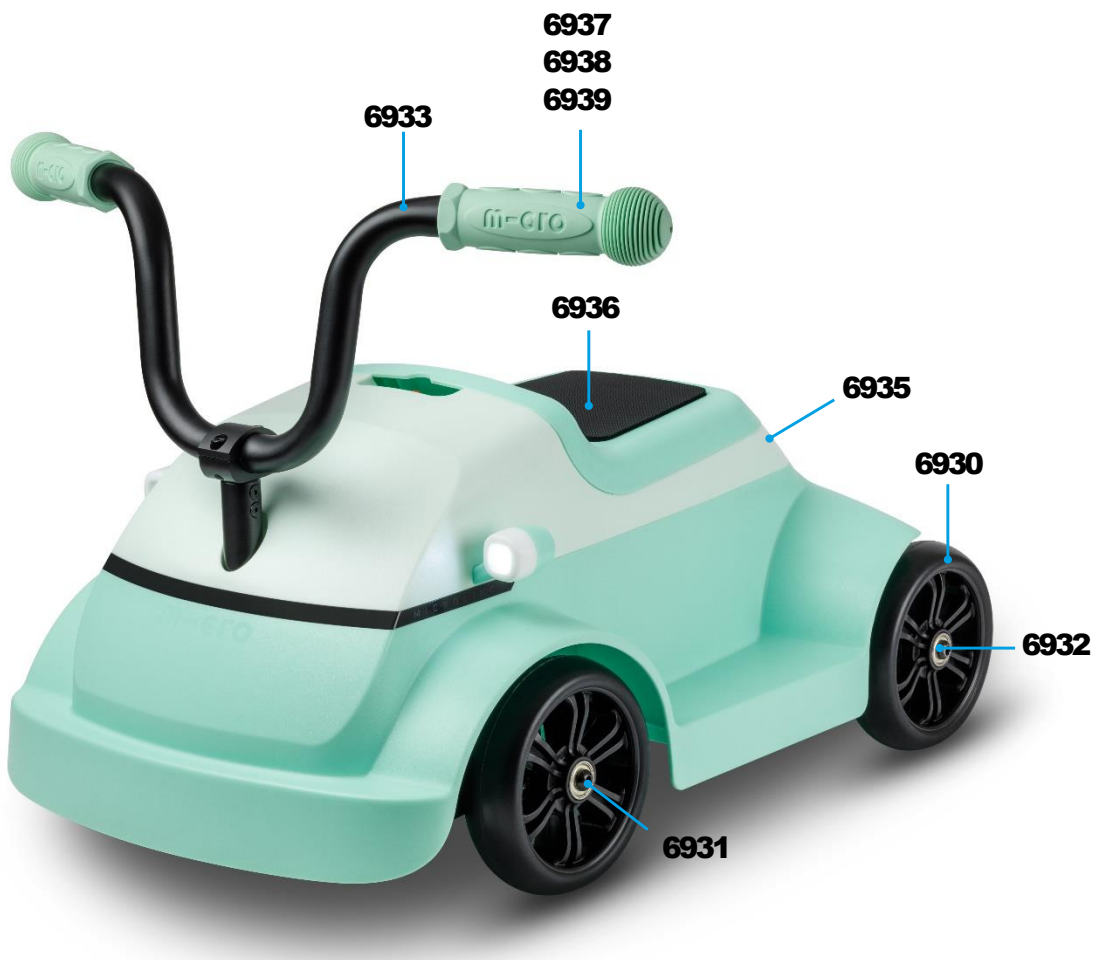

TRAVEL

MICRO LUGGAGE 2

PARTS

Article No.	Article
1900	High Density Rubber Hand Grip
1906	Front Wheel
1908	Griptape
1911	Back Wheel
1912	Spacer (Outside) Back Wheel
1922	Screw For T-Bar Holder
1923	Pin And Spring For Extension
1924	Plastic T-Bar Guidance
1925	Button, Blue
1926	Case
1927	T-Bar Complete
1928	Countersunk Bolt
1929	Metal Plate
1930	Deck Complete With Brake Without Wheel
1931	Stopper
1932	Fan Washer For Stopper
1933	Safety Bar
1934	Brake Complete
1935	Steering Link Complete Without Wheel
1936	Front Axle
1937	Rear Axle
1940	Anti Slide Cover

ACCESSORIES

Article No.	Article
AC1007	Single Bearing ABEC 9

ML0007 *Micro x Steve Aoki Luggage Sound2Go*

MICRO SCOOTER LUGGAGE KICKPACK / KICKPACK LITE / 3.0

PARTS

Article No.	Article
3287	T-Bar Holder With Spacer
3288	Front Cover With Screws
3289	Complete T-Bar With Handles
3364	Complete T-Bar With Handles 3.0
3290	Steering Part With Axle
3291	Screw
3292	Rear Axle With Screw
3293	Deck With Brake And Griptape
3365	Deck With Brake And Griptape 3.0
3294	Folding Set
3295	Brake
6508	Front Wheel Set
6740	Rear Wheel Set
3298	Griptape
3366	Griptape 3.0
3299	Backpack Stand Lite
3302	Hand Grips
3368	Kickpack 3.0 Backpack Black

3368

MICRO LAZY LUGGAGE

PARTS

Article No.	Article
4081	Pedestal
6507	Small Wheel
4086	Seat Pad With Holder
4087	Plastic Handle Bar
4089	Luggage Holder
6503	Front Holder Complet
6504	Wheel Axle Set Front
6508	Big Wheel

MICRO RIDE ON LUGGAGE EAZY BUSINESS

PARTS

Article No.	Article
4081	Pedestal
6507	Small Wheel
4086	Seat Pad With Holder
4087	Plastic Handle Bar
4089	Luggage Holder
6503	Front Holder Complet
6504	Wheel Axle Set Front
6508	Big Wheel
6523	Luggage Eazy Business

MICRO RIDE ON LUGGAGE EAZY

PARTS

Article No.	Article
6502	Axle To Hold Front Part
6504	Axle For Small Front Wheels With Spacer
6506	Axle For Big Wheels With Spacer
6507	Small Front Wheels
6508	Big Wheel
6536	Front Wheel Complete

ML0013 ML0021 ML0020 ML0022 ML0034

ML0041 ML0032 ML0033 ML0043 ML0044 ML0040

COLOURS

Article No. And Colour	Push Button With Holder	Luggage	T-Bar Complete With Seat And Screw For Ground Plate	Frame With Seat Complete Without Luggage	Front Support Leg Complete Without Wheels	T-Bar
ML0013 Black	6509	6510	6500	6505		
ML0020 Cactus Green	6513	6514	6512			
ML0021 Cool Berry	6517	6518	6515			
ML0022 Ice Blue	6521	6522	6519			
ML0032 Violet				6523	6530	
ML0033 Forest Green				6527	6531	6534
ML0034 Ocean Blue				6529	6532	
ML0040 Pink Allrounder				6207	6209	6211
ML0041 Blue Allrounder				6208	6210	6211
ML0043 Forest Green Weekender				6527	6531	6211
ML0044 Dark Blue Weekender				6213	6214	6211

MICRO LUGGAGE 3.0

PARTS

Article No.	Article
1900	Handle Grips
1937	Rear Axle
6127	Luggage 3.0 Case
6158	Front Part Complete Mounted With Handles
6159	Brake With Screws
6160	Front Steering
6161	Front Axle
6162	Deck Complete
6163	Front Wheel

MICRO SCOOTER LUGGAGE 4.0

PARTS

Article No.	Article
1900	Handles
1937	Rear Wheel Axle
6161	Front Wheel Axle
6128	Front Part Complete Mounted With Handles
6159	Brake With Screws
6119	Shoulderstrap
6115	Front Steering Lever Set
6125	Folding Limit Spacer
6124	Griptape
6123	Rear Wheel Space
6740	Rear Wheel
6113	Bag Complete With Shoulderstrap
6121	Stand Fixing Plate
6163	Front Wheel

MAXI MICRO 4IN1

PARTS

Article No.	Article
1055	Spacer Between Bearings 10.25 mm
1488	Plastic Linkage Tube
1487	Quick-Acting Clamp
1489	Stopper, Red
1490	Stopper, Blue
1492	Lower Tube

ACCESSORIES

Article No.	Article
AC9008	Maxi Bag and T-Bar, Blue
AC9010	Maxi Bag and T-Bar, Purple
AC9013	Interchangeable T-Bar
AC9014	Maxi Bag And T-Bar, Bronze Shoe Design
AC9015	Maxi Bag And T-Bar, Purple Floral Design
AC1007	Single Bearing ABEC 9

AC9010

AC9014

AC9015

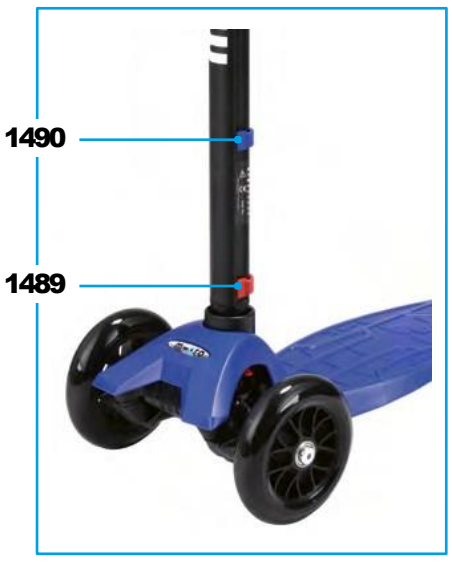

MICRO SCOOTER LUGGAGE JUNIOR

PARTS

Article No.	Article
6069	Rear Wheel Axle
6070	Front Wheel Fixed Screw
6164	T-Bar Complete Old
6157	T-Bar Complete New
6165	Rubber Handles Mint
6110	Rubber Handles Blue
6100	Rubber Handles Pink
6206	Rubber Handles Aqua
6166	Folding Cable
6203	Alu Pulling Plate For Foldingmechanism
6167	Front Axle
6168	Folding Mechanism Old
6204	Folding Mechanism New
6169	Fixing Flat
6193	Auxiliary Bracket With Auxiliary Wheel Complete
6195	Rear Brake Complete
6196	Rear Wheel Fixed Bracket
6197	Griptape Mint
6112	Griptape Pink
6111	Griptape Blue
6205	Griptape Aqua
6198	Reflectiv Sticker
AC5002B	Rear Wheel
4865B	Front Wheel Set

MICRO TRIKE | DELUXE

PARTS

Article No.	Article
3165	Plug For Screw Big
3166	Plug For Screw Small
3167	Screw For Handle Big
3168	Screw For Handle Small
3169	Handle Complete
3170	Bolt And Spring Handlebar
3171	Quick Acting Clamp
3172	Limiting Sleeve
3173	Straight Bar Complete
3174	Screw Seat Lock
3175	Seat Lock
3176	Spring Seat Lock Left
3177	Spring Seat Lock Right
3178	Stop Pin
3179	Screw Stop Pin
3180	Foot Rest
3181	Bushing Fork
3182	Axle Front Wheel
3183	Axle Seat
3184	Seat
3185	Axle Center
3186	Axles Rear Wheel
3187	Wheel
3188	Arm Rest Bar Complete
3189	Swiss Logo
3190	Plastic Linkage
3191	Ring Between 3190 and 3172
3192	Spacer Outside Rear Wheel
3193	Spacer Inside Front Wheel
3248	Handlebar Complete
3257	Metal Frame Cover Left And Right With Screw

ACCESSORIES

Article No.	Article
AC6003B	Rubber Handles
AC4626	Safety Belt

COLOURS

Article No. And Colour	Arm Rest Bar Complete	Straight Bar Set	Handlebar Complet	Limiting Sleeve + Fix Screw Black
TR0002 Black	3240	3244	3248	3249
TR0004 Deluxe Pink	3241	3245	3248	3249
TR0005 Deluxe Blue	3242	3246	3248	3249
TR0006 Deluxe Gold	3243	3247	3248	3249

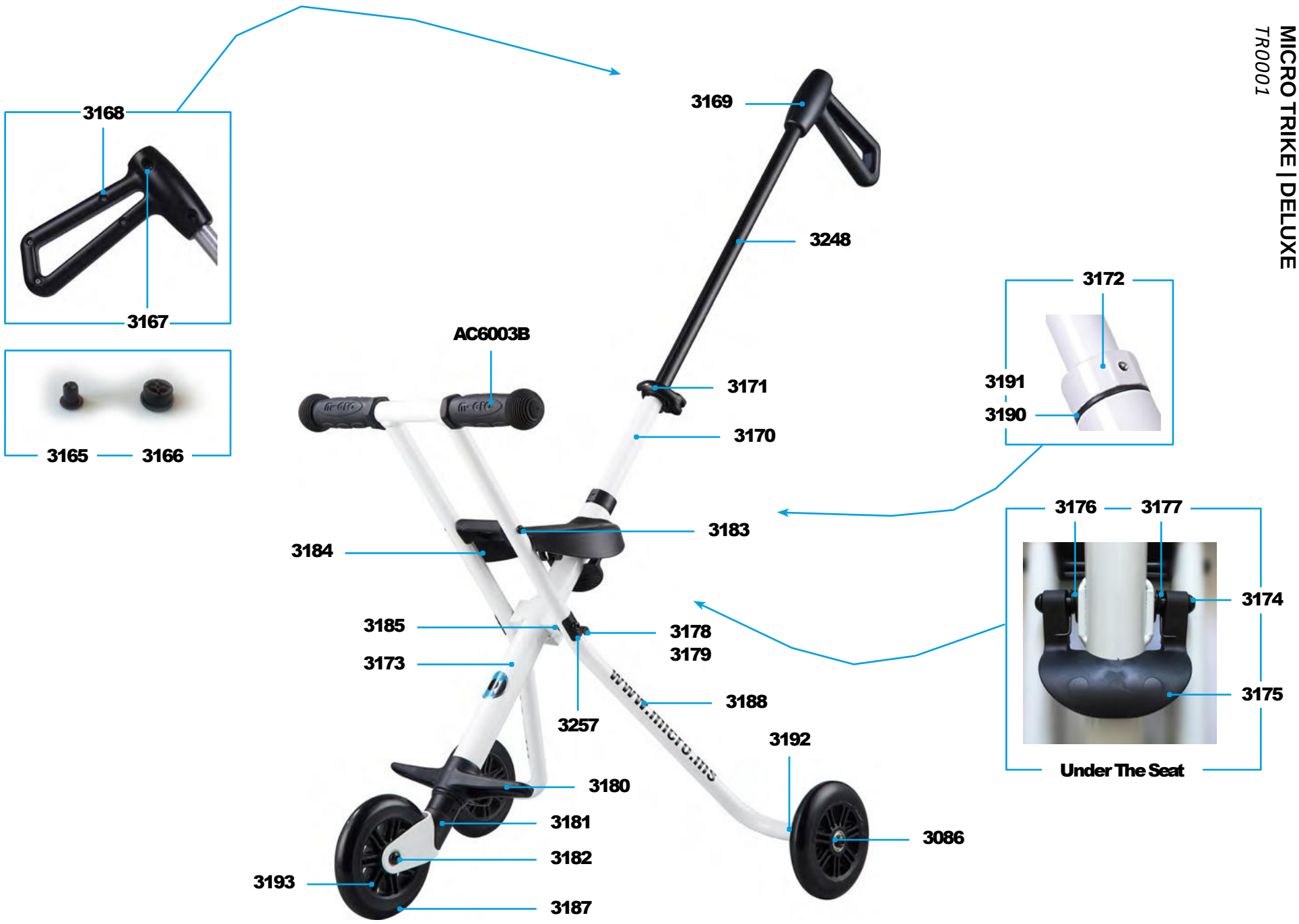

MICRO TRIKE | DELUXE
TR0001

MICRO TRIKE XL

PARTS

Article No.	Article
3275	Metal Frame Cover Left And Right With Screw
3276	Axle For Seat
3277	Armrest Bar Set, Ice Blue With Seat
3279	Upper Bar With Bolt And Spring
3280	Guidance Ring Complete With Plastic Spacer
3281	Axle Front Wheel
3282	Lower Bar, Ice Blue
3283	Axle
3284	Wheel With Bearing
3285	Upper Clamp

ACCESSORIES

Article No.	Article
AC6003B	Rubber Handles

COLOURS

Article No. And Colour	Arm Rest Bar Set	Lower bar
TR0007 Ruby Red	3278	3286
TR0008 Ice Blue	3277	3282
TR0013 Shocking Pink	6151	6152
TR0011 Aqua	6150	6153
TR0012 Black	6154	6155

MICRO TRICYCLE

PARTS

Article No.	Article
3307	Guardrail
3312	Pedals
3310	Rubber Handles Latte
3311	Rubber Handles Matcha
3308	Sunshade Latte
3309	Sunshade Matcha
3305	T-Bar Latte
3306	T-Bar Matcha
3310	Seat Back Latte
3311	Seat Back Matcha
3313	Front Wheels Latte
3314	Front Wheels Matcha
3315	Rear Wheels Latte
3316	Rear Wheels Matcha

TR0022

MICRO TRICYCLE
TR0021

MICRO BABY CRUISER 360°

PARTS

Article No.	Article
3343	Armbar Black
3344	Canopy Frame
3345	Front Wheels Matcha
3346	Front Wheels Latte
3371	Front Wheels LED Matcha
3370	Front Wheels LED Latte
3347	Rear Wheels Matcha
3348	Rear Wheels Latte
3349	Brake Pin
3350	Brake Pedal
3351	T-Bar Matcha
3352	T-Bar Latte
3353	Basket Hook
3354	Quick Release For Front Wheels
3355	Shoulder Pad Matcha
3356	Shoulder Pad Latte
3357	Crotch Pad Matcha
3358	Crotch Pad Latte
3369	Footrest

TR0023

MICRO BABY CRUISER 360°
TR0024

FREESTYLE

MICRO TRIXX 2.0

PARTS

Article No.	Article
3026	Plugs
3037	Front Axle
3038	Rear Axle
3039	Spacer
3073	Griptape
3142	Headset
3202	Handles, Brown
3203	One PIce Bar, Brown
3204	Clamp, Brown
3205	Fork, Brown
3206	Deck, Brown
3207	Brake

ACCESSORIES

Article No.	Article
MX1213	Wheel, White / Brown

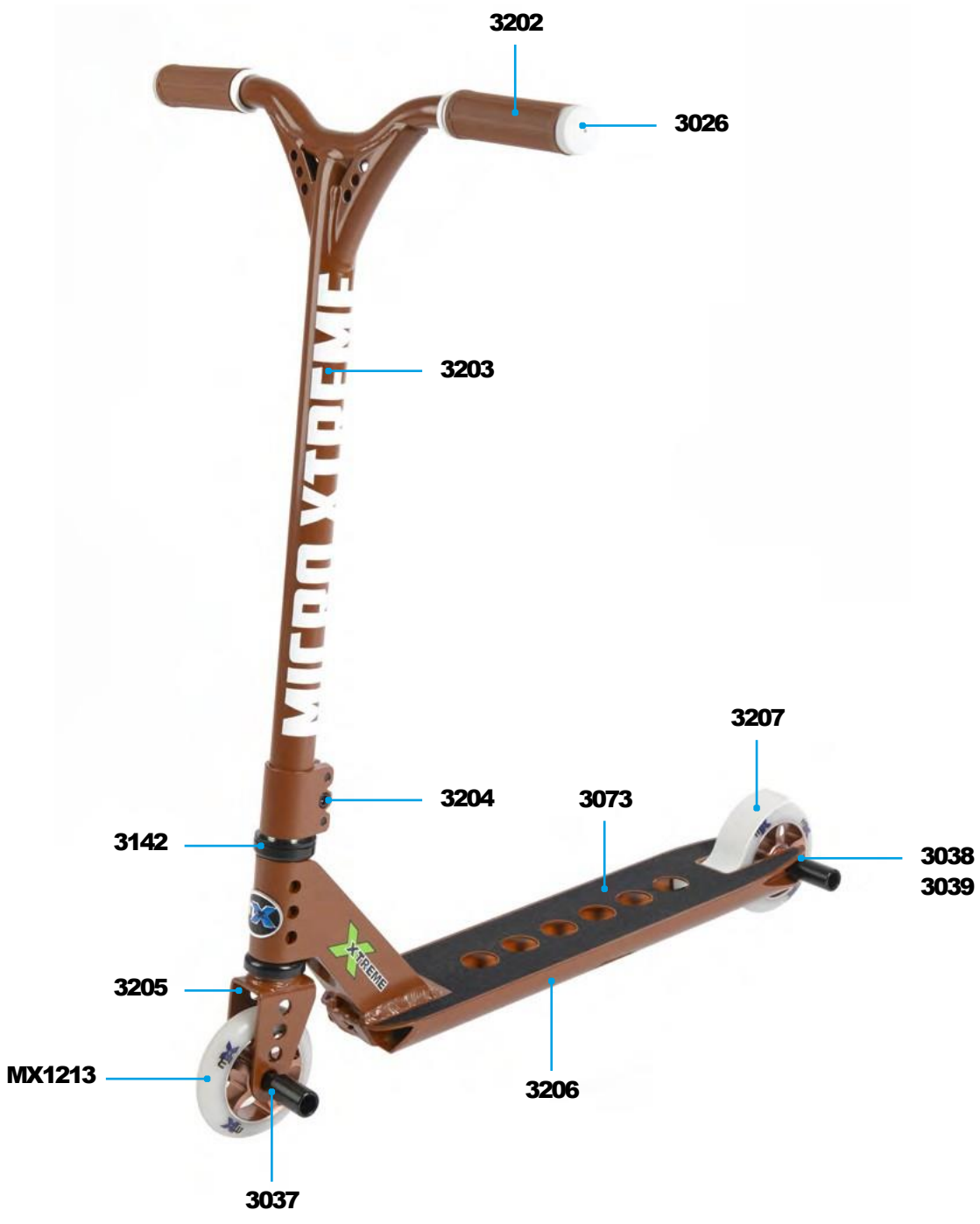

MICRO TRIXX | 2.0

COLOURS

Article No. And Colour	Deck	Clamp	Handles	One Piece Bar	Fork	Griptape	Brake	HIC (Hidden Internal Compression)		
SA0086 Red	3069	3066	3064	3065		3073	3072			
SA0087 Blue	3070	3067	3064	3065		3073	3072			
SA0088 Green	3071	3068	3064	3065		3073	3072			
SA0108 Blue Black	3097		3064	3096	3098	3073	3072	Tube cap	Tube	Headset Bearing
SA0104 Black	3093			3091		3073		3140	3141	3142
SA0113 Rainbow Pink	3147	3159	3151	3143	3136	3073		3140	3141	3142
SA0114 Rainbow Green	3148	3157	3153	3144	3137	3073		3140	3141	3142
SA0115 Rainbow Aqua	3149	3159	3152	3145	3138	3073		3140	3141	3142
SA0116 Rainbow Blue	3150	3158	3153	3146		3073		3140	3141	3142
SA0184 Ocean Blue 2.0	3267	3265		3262	3270	3073	3207	3140	3141	3142
SA0185 Mint / White 2.0	3268	3265	3260	3263	3270	3073	3207	3140	3141	3142
SA0186 Grey Yellow 2.0	3169	3266	3261	3264	3271	3073	3272	3140	3141	3142

ACCESSORIES

Article No.	Wheel	Info
MX1204	Wheel Black / Red	100 mm
MX1205	Wheel White / Black	100 mm
MX1209	Wheel Green / Blue	100 mm
MX1210	Wheel Blue / Blue	100 mm
MX1211	Wheel Green / Green	100 mm
MX1212	Wheel Blue / Green	100 mm
MX1213	Wheel White-Brown	100 mm
MX1217	Wheel Black-Black	100 mm

SA0113

SA0114

SA0115

SA0116

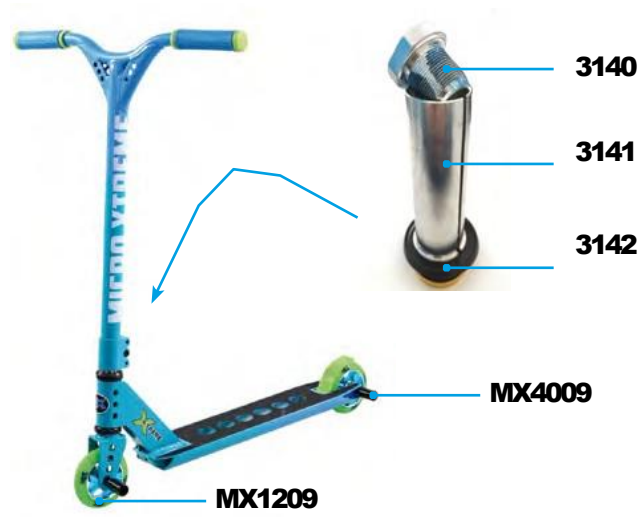

SA0104

SA0184

SA0185

SA0186

MICRO RAMP

PARTS

Article No.	Article
6131	Handles Black
6134	Griptape
6138	Brake With Screws Black
6139	Front Wheel Axle
6140	Rear Wheel Axle
6142	Headset
6732	Clamp Black
6733	Wheel Core Black
6738	Wheel Core Silver
6737	Fork black

COLOURS

Article No. And Colour	T-Bar With Handles	Deck With Griptape
SA0190 Black	6130	6129
SA0191 Purple	6133	6132
SA0192 Cyan	6136	6135

SA0190

SA0191

MICRO RAMP
SA0129

MICRO FREERIDE STREET

PARTS

Article No.	Article
3031	Headset
3064	Handles
3208	One Piece Bar
3209	Clamp
3210	Fork
3211	Deck With Griptape
3212	Brake
3213	Griptape
3214	Axle Front
3215	Axle Rear
3216	Spacer
3217	Spacer

MICRO FREERIDE STREET
SA0146

MICRO CROSSNECK | XL

PARTS

Article No.	Article	Info
4017	Headset	
4018	SCS Compressions System	
4019	Deck, Red	⚠
4020	Steering Fork	
4021	Axle Front	
4023	Brake Plate Complete	
4024	Axle Back	
4025	Spacer (Outside) Back Wheel	
4026	Griptape	
4027	Plugs For Handels	Set
4028	Washer For SCS Clamp	
4029	Deck Black	⚠
4030	Handels	Set
4031	One PIce Bar	

ACCESSORIES

Article No.	Article	Info
AC1007	Single Bearing ABEC 9	
MX1201	Wheel Black / Purple	110 mm
MX1202	Wheel Black / Blue	110 mm
MX1203	Wheel Black	110 mm
MX1206	Wheel Black / Chrome	110 mm
MX1207	Wheel Black / Red	110 mm
MX1208	Wheel Black	110 mm
MX4010	Pegs	From 2015

SA0125 XL

SA0126 XL

⚠ **Attention:**
Spare parts
4019 | 4029
on request only!

MICRO CROSSNECK | XL
SA0129

MICRO CROSSNECK 2.0

PARTS

Article No.	Article	Info
4017	Headset Black	
4018	SCS Compressions System, Black	
4020	Steering Fork	
4021	Axle Front	
4023	Brake Plate Complete, Black	
4024	Axle Back	
4025	Spacer (Outside) Back Wheel	
4027	Plugs For Handels	set
4030	Handels	set
4056	SCS Compressions System, Gold	
4057	One piece bar, Black	
4058	Deck With Griptape, Gold	
4059	Griptape	
4061	One Piece Bar,Silver	110 mm
4063	Headset Silver	
4064	Deck With Griptape, Black	

ACCESSORIES

Article No.	Article	Info
AC1007	Single Bearing ABEC 9	
MX1201	Wheel Black / Purple	110 mm
MX1202	Wheel Black / Blue	110 mm
MX1203	Wheel Black	110 mm
MX1206	Wheel Black / Chrome	110 mm
MX1207	Wheel Chrome / Red	110 mm
MX1208	Wheel Black	110 mm
MX4010	Pegs	From 2015

SA0149

MICRO CROSSNECK 2.0
SA0148

MICRO CORE | XL

PARTS

Article No.	Article	Info
4018	SCS Compressions System	
4023	Brake Set, Black	
4030	Handles	
4066	Spacer	
4071	Deck With Grip Tape	Core XL
4074	Deck With Grip Tape	Core
4075	One Piece Bar	Core
4076	Griptape	Core
4077	Headset	
4078	Steering Fork	Core
4080	Axle Rear	
4082	Axle Front	
4068	Brake Set	Core XL
4070	Steering Fork	Core XL
4071	Deck With Griptape	Core XL
4072	One Piece Bar	Core XL
4073	Griptape	Core XL

ACCESSORIES

Article No.	Article	Info
AC1007	Single Bearing ABEC 9	
MX1215	Wheel 110 mm Black/Green (Round PU)	110 mm
MX1216	Wheel 110 mm White Black (Round PU)	110 mm
MX4010	Pegs	From 2015

SA0145

MICRO BENJ PRO MODEL

PARTS

Article No.	Article
3064	Handles, Black
3075	Handles, White
3076	One Piece Bar
3079	Headset
3080	Steering Fork
3084	Brake Complete
3085	Screw For Brake
3086	Front Axle
3087	Back Axle
3088	Spacer (Outside) Back Wheel
3089	Spacer (Outside) Front Wheel
3160	Deck With Griptape, Lavender
3161	SCS Compression
3162	Deck With Griptape, Crystal Blue
3163	SCS Compression System

ACCESSORIES

Article No.	Article
AC1007	Single Bearing ABEC 9
MX1203	Wheel, Black
MX4006	Pegs

SA0128

MICRO STUNT SCOOTER GENESIS

PARTS

3317	Rubber Handles Black
3318	T-Bar And Head Tube Sticker
3319	Headset Black
3320	Fork Black
3322	Brake With Screws Black
3323	Front Wheel Axle Black
3324	Rear Wheel Axle Black
3325	Clamp With Screws Black
3327	Spacer Rear Wheel
3328	Griptape

ACCESSORIES

Article No.	Article
3321	Single Bearing ABEC 9
3326	Wheel 100mm Black

MICRO STUNT SCOOTER MAVERICK

PARTS

3317	Rubber Handles Black
3318	T-Bar And Head Tube Sticker
3319	Headset
3363	Fork Black
3322	Brake With Screws Black
3323	Front Wheel Axle
3329	Clamp With Screws Black
3331	Rear Wheel Axle
3332	Spacers Rear Wheel
3333	Griptape

ACCESSORIES

Article No.	Article
3321	Single Bearing ABEC 9
3330	Wheel 110mm Black

MICRO STUNT SCOOTER SUPREME

PARTS

3324	Rear Wheel Axel
3334	Rubber Handles Black
3335	T-Bar And Head Tube Sticker
3336	Clamp With Screws Black
3337	HIC Compression And Headset
3338	Fork Black
3340	Front Wheel Axle
3341	Spacer Rear Wheel
3342	Griptape

ACCESSORIES

Article No.	Article
3321	Single Bearing ABEC 9
3339	Wheel 110 Blue Rim

MICRO Stunt Scooter Supreme
SA0290

MICRO TROOPER

PARTS

CSH9019	Rubber Handles Black
3359	T-Bar And Screws
CEC0030	Lower Clamp With Screws
CEF0031	Front Fork Black
CEH0006	Headset Complete
3360	Deck With Brake And Screws
Cso0017	Front Wheel Axle
Cso0005	Rear Wheel Axle
Cso0044	Spacer For Rear Wheel
C-1048-B	Brake With Screws
3362	Griptape

ACCESSORIES

Article No.	Article
AC1007	Single Bearing ABEC 9
3361	Wheel 145mm Black

MICRO BLACK ICE

PARTS
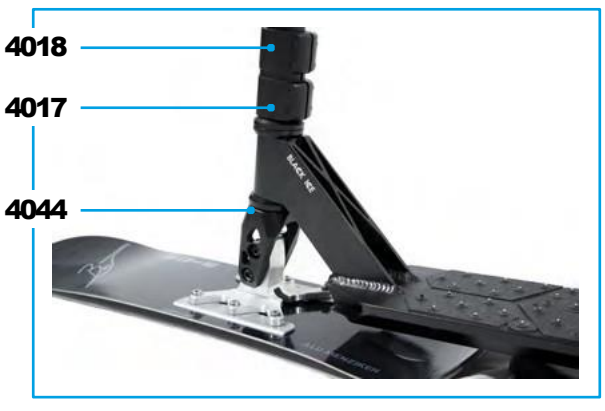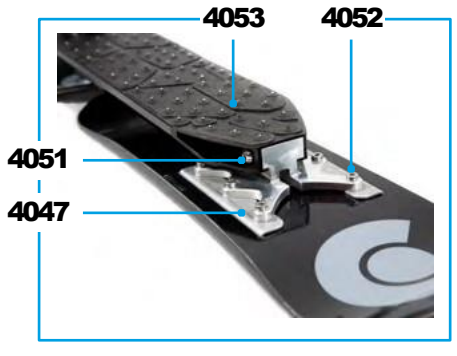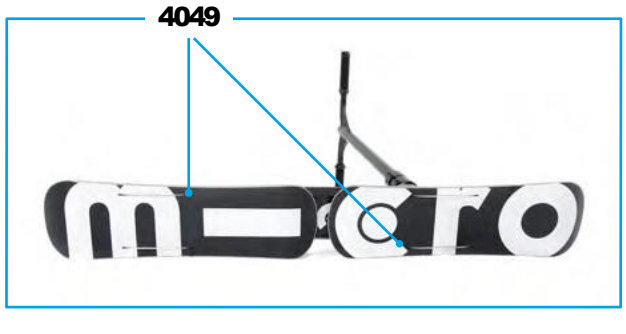
article no.	article
4017	headset
4018	SCS Compression System
4031	one piece bar
4043	deck
4044	fork
4045	handles set pair
4047	back alu holder
4048	front alu holder
4049	H steel holder
4050	screw fork / H steel holder
4051	screw back alu holder / deck
4052	screw alu holder / deck
4053	griptape
4054	leash
4055	ski (set)